A View on the Material Design Interface "From Europe"

Eberhard Diegele
Insitute for Materials Research II
Forschungszentrum Karlsruhe, Germany

at the
US Fusion Material Science Programme Strategic Meeting
28th August 2002

Content:

- EU Materials Assessment Meeting June 2001
- EU Programme 2003-04 (Materials and Blanket)
- He-cooled Divertor (HEMP)
- Design Code Development
- The Role of Modeling

EU Materials Assessment Meeting June 2001

The R&D activities needed in the RAFM programme in order to design and fabricate the TBM's to be tested in ITER and the IFMIF facility should be identified.

RAFM for TBM

- **RAFM characterisation, R&D priorities:**
  - **on un-irradiated materials,**
  - **on irradiated materials.**
- **RAFM specification and procurement, R&D priorities:**
  - **to improve the reproducibility of the material's properties,**
  - **to improve the material's performances reliability.**
- **RAFM manufacturing and implementation issues, R&D priorities for:**
  - **welds and joints**
  - **tubing,**
  - **powder HIP material qualification.**
- **Design rules needs for design and licensing, R&D priorities for:**
  - **Material qualification,**
  - **Design code.**

EU Materials Assessment Meeting June 2001

Discussion for concepts using SiC/SiC as structural material

For a given mechanical load,

- **which are the limiting composite properties (fibre, matrix, interface strength)?**
- **Needs for specific models and codes in order to perform design analysis?** !!
- **Coating (needs for sealing, to avoid interaction with fibres, reliability**?)

Additional questions to concepts using SiC as flow channels insulators

- **Which type of materials (SiC composites, porous SiC, others?)**
- **Which are the requirements (electrical/thermal insulation, leak tightness, compatibility with Pb-17Li, mechanical strength).**
- **Needs for new materials, technologies and concepts in order to improve the efficiency, availability at low cost and economic decommissioning.**

EU Materials Assessment Meeting June 2001

Additional questions to concepts using W as structural material

Which possible coolant and breeder associated with?

Fabrication feasibility incl. connections with the heat exchanger?

Can we cope with the high after heat?

Additional questions to concepts using ODS as functional material

What is the main incentive to go to ODS (creep rate, YS at high T?)

Which application for ferritic ODS steel (up to 1050K)??

A View on the Material Design Interface "From Europe"
EU Blanket Programme – Long Term Strategy

Breeding Blanket

In the TBMs planning three major phases can be identified:

- **Phase 1 up to the end of 2004: preparation phase. The activities are focussed in the development and characterisation of materials and fabrication technologies, safety analysis and design development including computational methods.**

- **Phase 2 up to the end of 2008: testing phase. Large-scale mock-up will be fabricated and tested in appropriate facilities; the instrumentation and the auxiliary circuits will be developed.**

- **Phase 3 up to the end of 2014: fabrication and assembly phase. The final TBMs (including all the auxiliary systems) will be designed, fabricated, tested and installed in ITER.**

A View on the Material Design Interface "From Europe"
EU Blanket Programme 2003-4

In consideration of the strong budget limitation in the 6th EU Framework Programme, a new strategy for the TBMs in EU is proposed.

Assuming that:

- **both types of breeding materials (lead-lithium and ceramic breeder) could have interesting prospects for fusion power plant applications or could show fatal flaws;**
- **between the two possible coolants (He and water) only He, at present, is compatible with both breeding materials;**
- **the TBMs will be installed in ITER since day 1 of operation in hydrogen;**

a new TBMs' programme based on the utilisation of one type of steel structure (the HCPB one), cooled by He but with the possibility to test in ITER both the ceramic and the *liquid lithium-lead breeder* materials is proposed

In other words the WCLL TBM will be replaced by a Helium Cooled Lithium-Lead (HCLL) concept.

A View on the Material Design Interface "From Europe"
EU Materials Programme 2003-4

In 2003-2004, the activities will concentrate on the preparation of the Eurofer qualification for TBM's.
In addition it will provide a basic support to conceptual design development related to DEMO.

- **Design rules for the materials, joints and specific sub-components for TBM's construction and licensing will be established.**

- **A set of Eurofer 97 irradiation up to 2.5 dpa will give the radiation induced limits indications of the steel for TBM's application in the next step machine. Compatibility studies will complete the determination of the range of application (@ Petten)**

- **Irradiation to higher fluence (up to 70 dpa) and evaluation of the He effect will allow giving preliminary indications on the potential of such steel in view of DEMO application (@ Dimitrovgrad, Russia)**

A View on the Material Design Interface "From Europe"
EU Materials Programme 2003-4 (continued)

Additional activities:

- **completion of the qualification of EUROFER 97 for TBMs and definition of the operational limits (Design Code)**
- **completion of Eurofer 97 characterisation (creep/fatigue interaction)**
- **effect of H on the fatigue crack growth prior irradiation**
- **modelling including validation experiments in the following two areas:**
  - **i. defect accumulation, void/bubble nucleation and growth, Helium effect**
  - **ii. dislocation – defect interactions and the mechanical properties of irradiated materials**

ODS:

Two routes are followed

1) **EUROFER - ODS (EUROFER + 0.25 Y_2O_3)**
2) ***Develop alternative ODS – RAFM (different associations involved, screening, selection by end of 2003)***

A View on the Material Design Interface "From Europe"
Test Blanket Modules (TBM)

ITER Test Blanket Modules (TBM) *(EU, Japan, Russia)*

EU concepts

- **HCPB (Helium Cooled Pebble Bed)**
- **HCLL (Helium Cooled Lithium Lead)**

Common features:

Structural material (EUROFER 200x)
First Wall geometry
Fabrication routes (as close as possible)

Loading conditions

Pulsed operation:

Burn cycles: 300 – 500 sec. (– 1000 sec.)
Average n-wall-loading 0.57 MW/m^2 (average) 0.8MW/m^2 (peak)

Normal operation:

"10" MPa pressure (8MPa – 15 MPa)
Surface heat flux 0.25 MW/m^2 (average) 0.5 MW/m2 (peak)
Neutron damage: "some" (3-5) dpa

Series of TBM's - going from conservative approaches to more innovative explorative concepts (with some risks in development)

A View on the Material Design Interface “From Europe”

Blanket Concepts

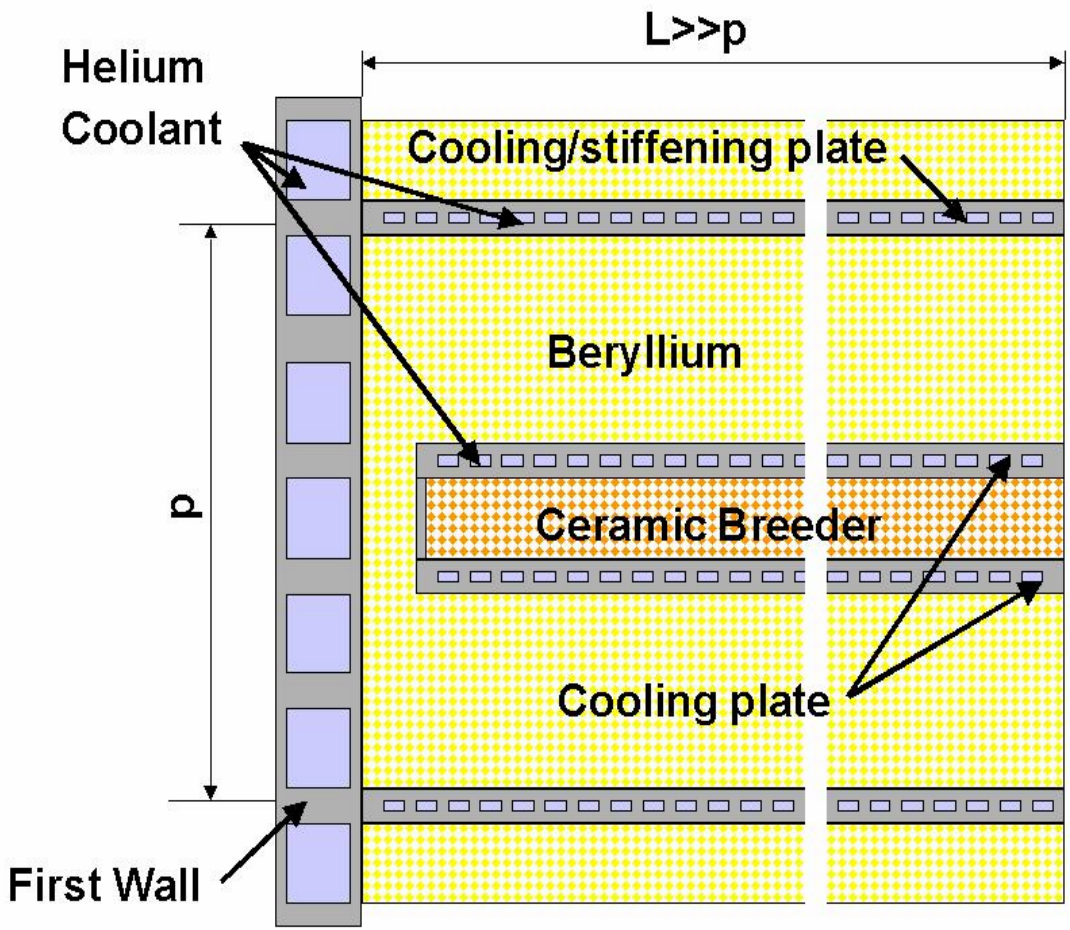

HCPB (Helium cooled pebble bed), S. Malang, FZK, IKET

A View on the Material Design Interface "From Europe"

Blanket Concepts

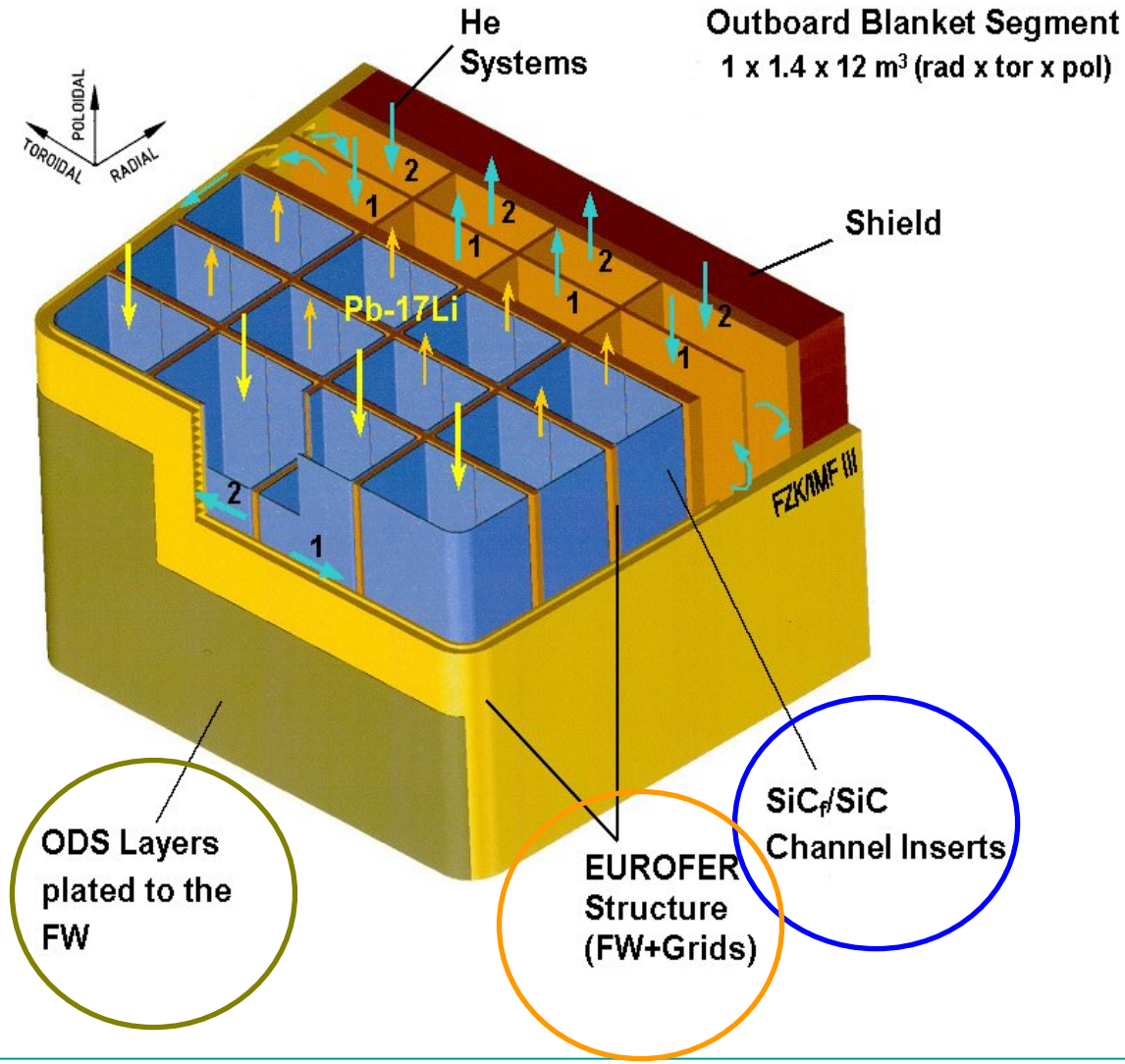

HEMP (Karlsruhe Helium Modular Pin fin array divertor concept)

Why gas cooling at 600°C ?

- Increase in thermal eficiency: power plant would waste 10-20% of total power if the divertor is operated with water at 200 °C
- For safety reasons water would not be acceptable in connection with ceramic breeder blankets using large amounts of beryllium
- To keep the structural temperature (of refractory alloys) above the embrittlement temperature (DBTT)

Design goals

- a heat flux of at least 15 MW/m^2
- a minimum temperature of the structure above 600 °C.
- the divertor has to survive a number of cycles (100-1000) between operating temperature and room temperature RT even for the steady state operation

Needs overlapping temperature operating windows of

PFC structural materials to be operated in between 650°C – 1300/1400 °C

Steels as structural material for manifolds

HEMP (Karlsruhe Helium Modular divertor concept with integrated Pin fin array)

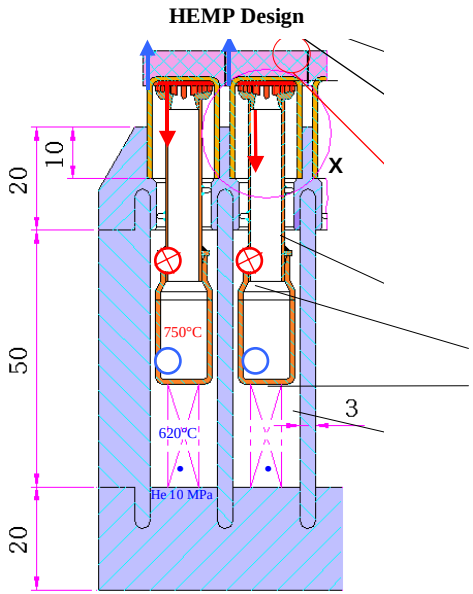

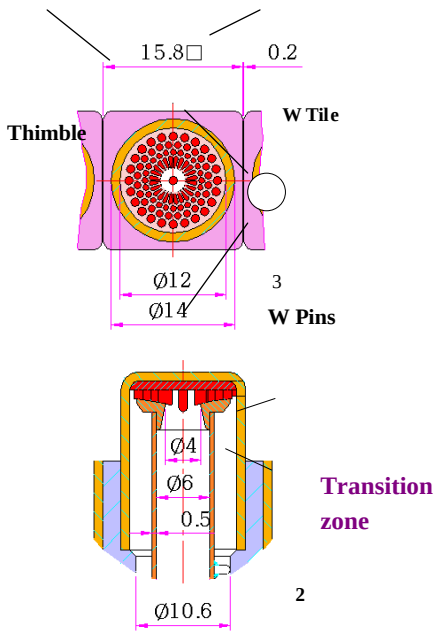

E. Diegele, Figure 1.
(preferably 1 pp)

Corresponding author: Eberhard Diegele
Forschungszentrum Karlsruhe, P.O. Box 3640, D-76021 Karlsruhe, Germany
Email: Eberhard.Diegele@imf.fzk.de
Phone: +49 7247 82 4944

HEMP (Karlsruhe Helium Modular Pin fin array divertor concept)

Critical locations due to mismatch in thermal expansion coefficient (under homogeneous temperature change)

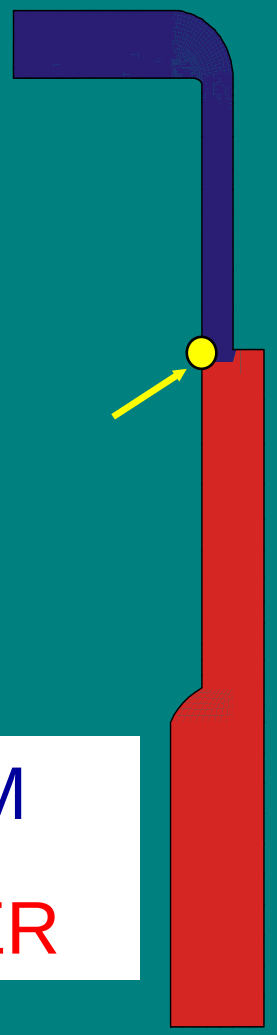

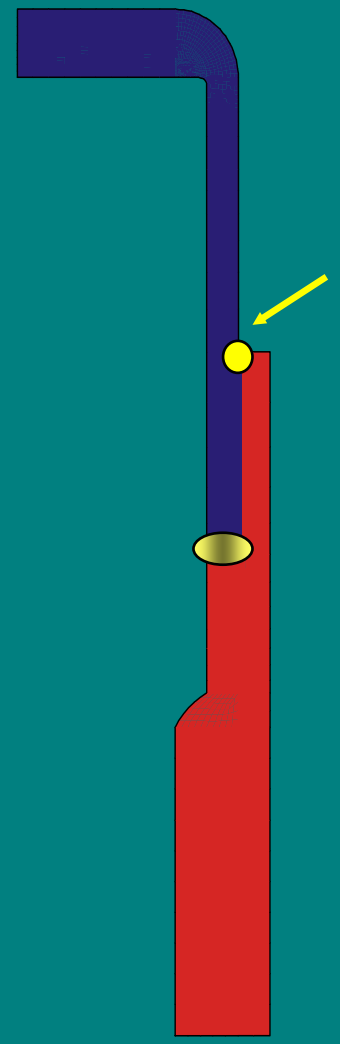

W or TZM

EUROFER

E. Diegele, S. Malang, G. Rizzi

EU Materials Programme 2003 - Added to portfolio in June 2002

<u>Deliverable 1</u>: W alloys development (due date: 06/03)
1a: Production of small batch of forged W, W-5Re, W-1% La2O3 with different grain size (in the nano-micro range) and low impurity content,
1b: Determination of their recrystallisation temperature,
1c: Selection of the most promising and production of samples for further characterisation (see del 3) and irradiation (see del 4).

<u>Deliverable 2</u>: W coating (due date: 12/03)
Development and (basic) testing of W thick coating (1-2 mm) onto EUROFER.
2a: CVD coating 2b: Plasma spray coating

<u>Deliverable 3</u>: Mechanical testing of improved W alloys (due date: 12/03)
3a: Tensile and fracture toughness testing (precracked Charpy and small CT) at 600 and 1300šC under vacuum
3b: Creep testing (<5000 hr.) at 1000 and 1300šC under vacuum.

<u>Deliverable 4</u>: Irradiation performance of improved W alloys (due date: 12/04)
Irradiation up to 5 dpa at 600 and 1000C. Activity to be combined with TW3-TTMA-001 del 4. PIE to be performed beyond 2004.

A View on the Material Design Interface "From Europe"

Design Criteria - Existing Documents

Structural Design Criteria for ITER include

SDC-G General Section

SDC-IC ITER Structural Design Criteria for In-Vessel Components

Appendix A: Material Design Limit Data

Appendix B: Guidelines for Analysis

Appendix C: Rationale or Justification of the Rule

as well as rules for

- **Magnets**
- **Vacuum Vessel**
- **Cryostat**
- **Cryoplant**
- **Diagnostics**
- **Buildings, ... (all covered by existing design codes)**

A View on the Material Design Interface "From Europe"
Design Criteria - work to do

Work to do includes, in particular, with respect to the TBM

(1) High temperature rules - Cyclic damage

• There is no explicitly formulated creep-fatigue-interaction rule, which might be necessary for the fatigue, thermal creep and irradiation creep as anticipated for TBMs.

(2) Fracture mechanics

• General picture: Elastic-plastic fracture mechanics not yet formulated. British R6 framework is a candidate.

• High temperature application could require to consider time-dependent fracture. The R5 method will be the natural extension of a R6-based fast fracture approach.

(3) Joints

The rules have to be extended to cover all joining techniques and typical junctions as foreseen in the HCPB and HCLL blanket concepts.

A View on the Material Design Interface "From Europe"
The Role of Modelling - I

(1) Development and Verification Analysis

Rules needs to be investigated

- **if extended to materials for which they were not initially deduced, e.g.**
  - **materials with lower amount of ductility**
  - **pronounced anisotropy**
  - **composite materials**
  - **multi-layer structures**
- **if applied to complex loading situations and complicated loading histories with multiple potential failure modes, e.g. in the presence of**
  - ❑ **stress and temperature gradients**
  - ❑ **multiaxial loading**
  - ❑ **interaction of thermal creep and fatigue with irradiation damage (swelling and irradiation creep)**

Examinations to be performed

- ➢ **on prototypes (sub components)**
- ➢ **under representative loading conditions**
- ➢ **most valuable in-pile, (mainly PIE)**

Verification experiments need predictions of measurable mechanical quantities (deformation - stress) or of damage and of failure (end of life, mode)

A View on the Material Design Interface "From Europe"
The Role of Modelling (A)

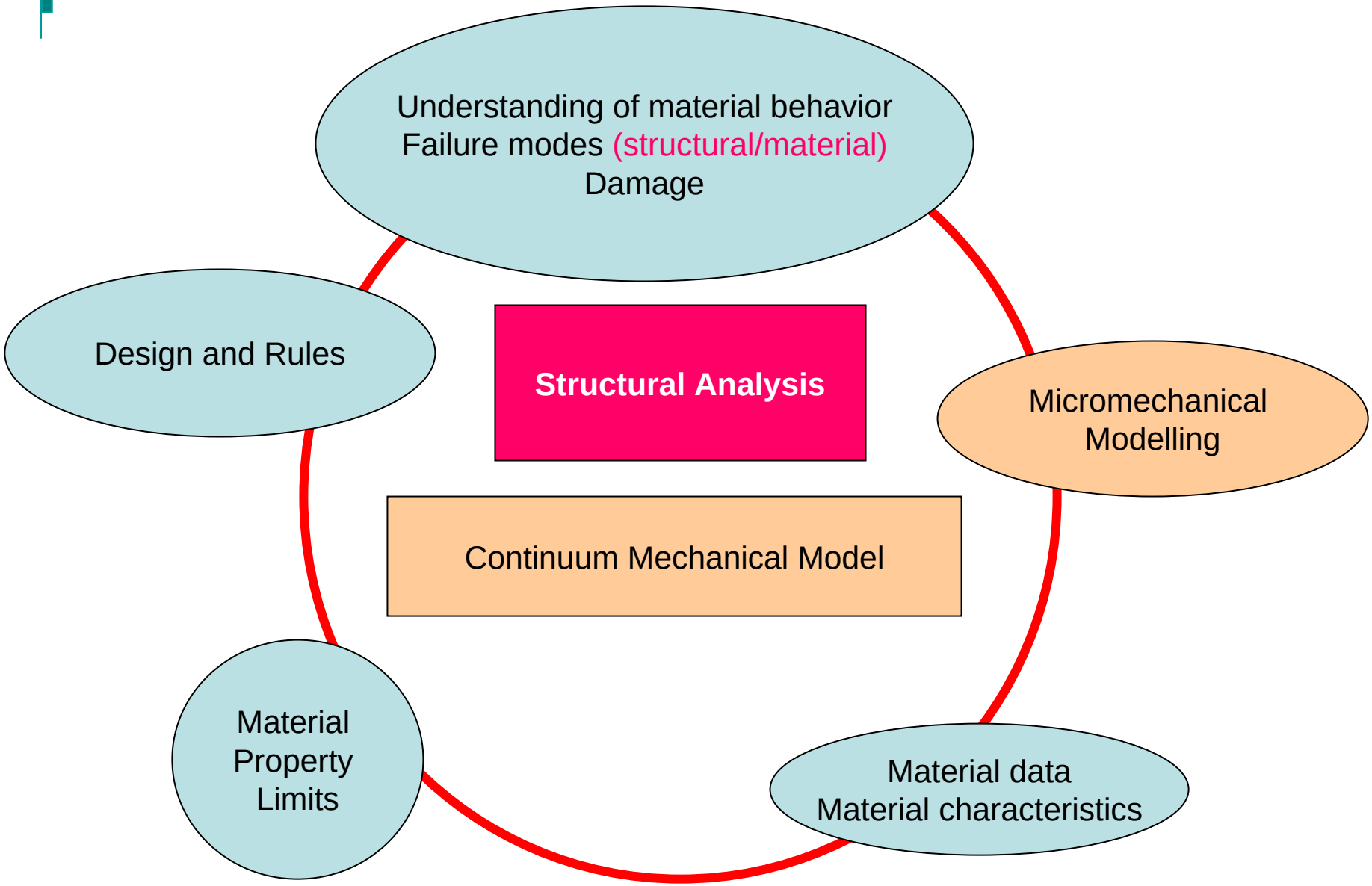

A View on the Material Design Interface "From Europe"
The Role of Modelling (B)

Structural Analysis
Tool: Finite Element Analysis

Analysis

Results

Assessment

Benefit

Evaluate loading histories
Temperature fields
Stress and Strain fields

Define Loads for Verification Experiments and Analysis

Identify critical locations

Identify critical loads

Input for Mock-up Tests Design and Operation (act-a-like)

Prospects and Limitations

Development and improvement Of Concept

A View on the Material Design Interface “From Europe”

On the role of modeling

Necessary tools for mechanism-oriented life time prediction

Macroscopic observable
Universal testing machine: $\sigma(t)$, $\varepsilon(t)$
Cyclic stress-strain behavior, plastic strain, life time

Microstructure
TEM
Dislocation dynamics, obstacles, lath/grain boundary stability

Crack analysis
Long range microscope, Metallography
crack formation & propagation, statistical examination

Completed:	**Fatigue of F82H, Eurofer, (ODS-Eurofer)**
To be started in 2003	**Creep-fatigue**

A View on the Material Design Interface "From Europe"
Constitutive Modelling (continuum mechanical approach)

Constitutive equations (deformation and damage) are the basis for design code development, in particular

- **Interpretation/Assessment of experimental data**
- **Evaluation of simplified rules**
- **Definition of verification experiments and their assessment**

Features of material models

High temperature

- ❑ **High thermal loads**
- ❑ **Pressure**
- ❑ **Hold times**
- ❑ **Cyclic operation**

Plastic

Creep

Relaxation

Cyclic hardening/ softening

A View on the Material Design Interface "From Europe"
Constitutive Modelling (continuum mechanical approach)

Implementation in FE-Codes (ABAQUS, *ANSYS, MARC*)

- **Viscoplastic (plastic-creep unified)**
- **non-linear isotropic hardening**
- **non-linear kinematic hardening**
- **recovery**

Currently implemented

A. Small deformation theory
including (simple) model on irradiation creep / swelling

B. Large deformation ("Non-nuclear")

including (isotropic) damage

NEED FOR IMPROVED MODELS

Determination of material parameter (7-19) from

either uniaxial tests or indendation tests *(one test per T)*

(series of loading, relaxation, unloading at different levels an rates)

by means of application of "neural networks"

A View on the Material Design Interface "From Europe"

Structural Design Criteria

Time schedule for design code evaluation

Today → 5 - 6 years → 6 - 9 years → 11-12 years → 2 - 3 decades

TBM design → TBM design frozen → Mock-up fabrication and tests → TBM fabrication for insert in ITER → DEMO

TBM - Eurofer

Identify missing criteria

New rules to be defined and verified

Design code fully available

Extend criteria up to high dose

Contact licensing authorities make familiar with new concepts and rules

Licensing