Retardation of Hydrogen Ingress into V-Ti Alloy by Surface Segregation of Ti

Yuji Hatano, Ryo Hayakawa and Kuniaki Watanabe
Hydrogen Isotope Research Center, Toyama University

Motivation

Liq. Li system **MHD coating is necessary**

Requirements:

dense, high resistance, long life or self healing

Candidates: thick ceramic coatings

Other systems **Tritium barrier (Oxidation barrier)**

Requirements:

dense, long life or self healing

Thickness is not important!

Candidates: oxide films (nitride films?)

We do not have to think liq. Li is only one partner of Vanadium alloys!

Gas-Solid Interface

Formation of self healing (or in-situ healing) oxide coating is possible, if vanadium alloy has a surface-segregation layer of metal whose oxides are more stable than V oxides.

Objective

Development of self healing (or in-situ healing) protective oxide coating through surface segregation of stable oxide forming metal element.

We started with Ti.

Experimental

Specimen: V-4%Ti alloy

1. Vacuum heating and surface analysis by XPS.

Is Ti segregated to the surface?

2. Oxidation in low pressure O_2 (10^{-5} - 10^{-3} Pa) at elevated temperatures (573 and 773 K).

Is stable oxide layer really formed by Ti segregation?

3. Hydrogen absorption test.

Is Ti oxide layer really effective as tritium barrier?

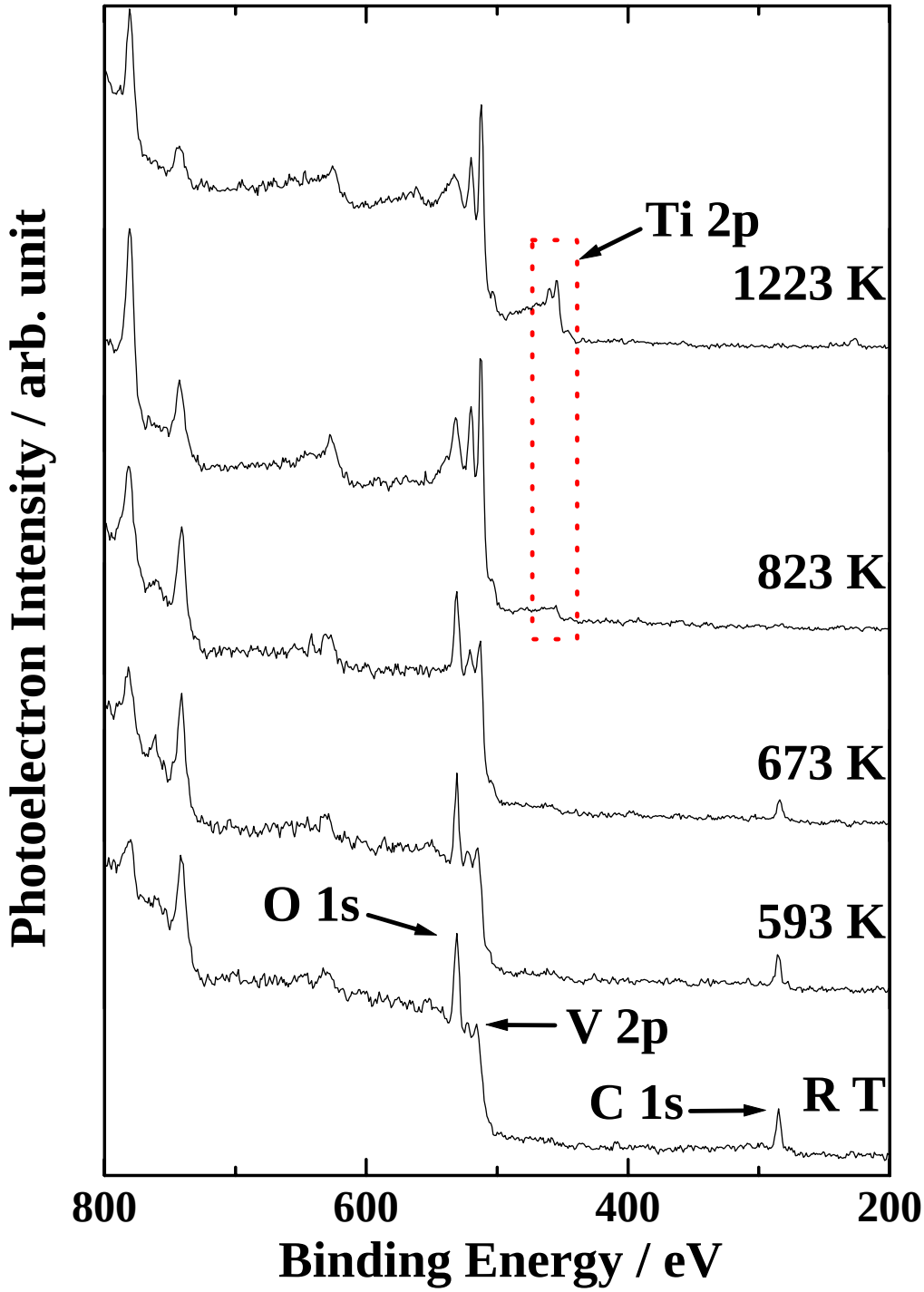

Change in photoelectron spectrum from as-polished V-4%Ti alloy by heating in vacuum for 10 min at each temperature.

Ti could be enriched at surface just by vacuum heating!
Segregation took place not only in ultra-high vacuum but also in usual high vacuum (10^{-4} Pa).

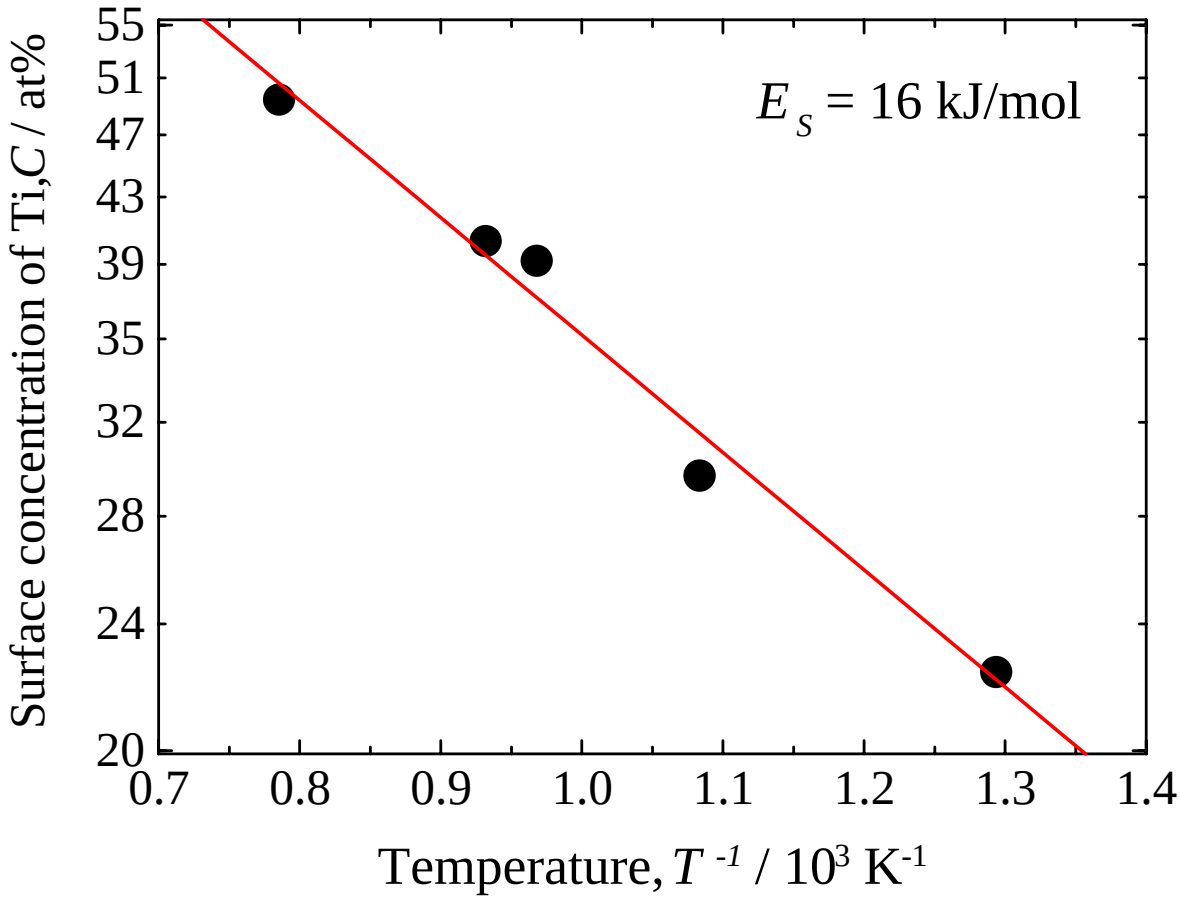

Temperature dependence of surface concentration of Ti

The temperature dependence does not follow general theory of surface segregation. The mechanism, however, has not been understood.

***Oxidation tests* were carried our after heating at 1273 K.**

(Surface Ti concentration: ca. 50 at%)

***Hydrogen absorption tests* were done after heating at 873 and 1273 K (ca. 30 and 50 at%, respectively).**

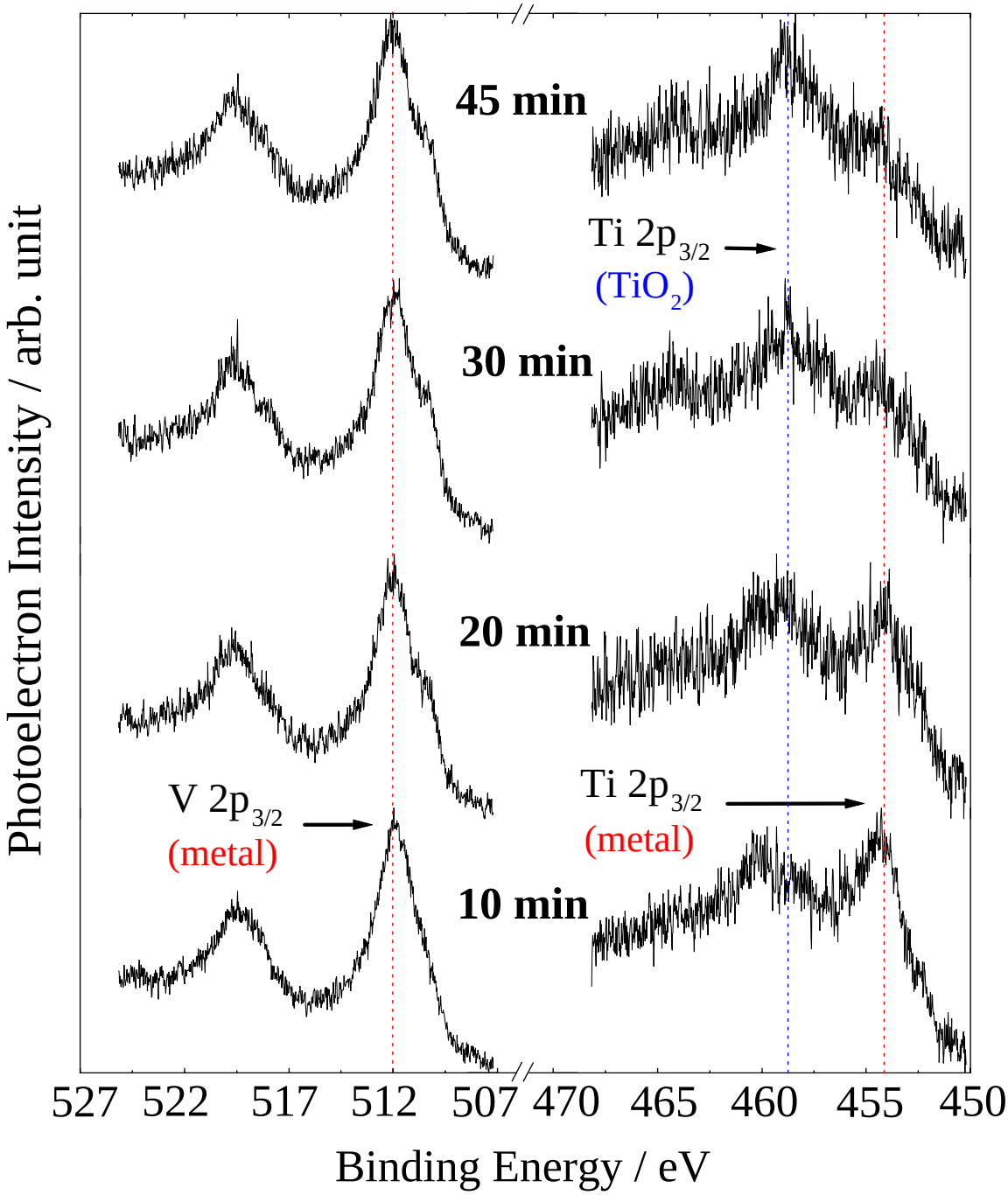

Typical result of oxidation test at 773 K and 10^{-4} Pa.
(V and Ti 2p photoelectron spectra)

Ti was selectively oxidized under this condition!

Hydrogen Absorption Test

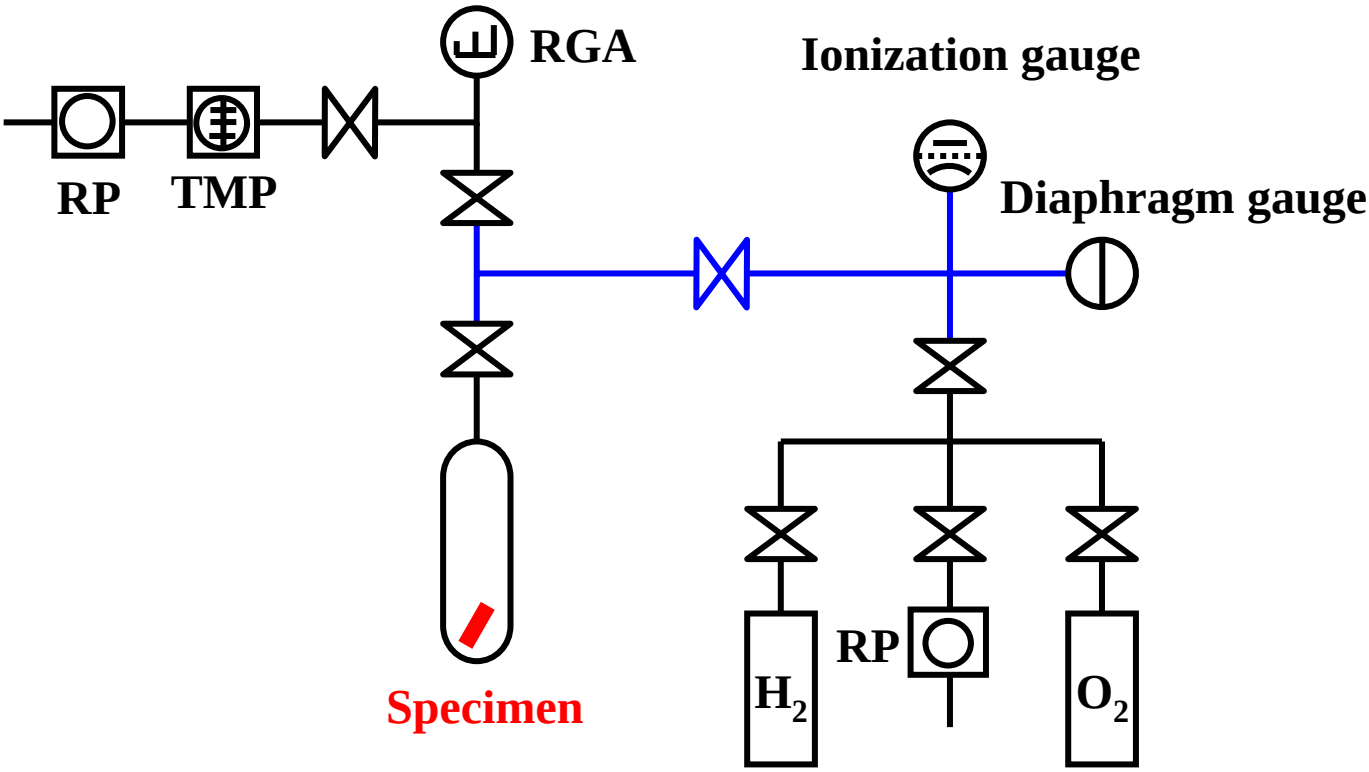

Schematic description of apparatus for H_2 absorption experiment.

Specimen: (1) mechanically polished (no Ti segregation)
(2) heated in vacuum at 873 K
(Ti concentration at surface: 30 at %)
(3) heated in vacuum at 1273 K
(Ti concentration at surface: 50 at %)

Temperature: 473 - 1023 K
Residual gas: 3×10^{-5} Pa water vapor
Volumetric Method, initial hydrogen pressure was 13.3 Pa

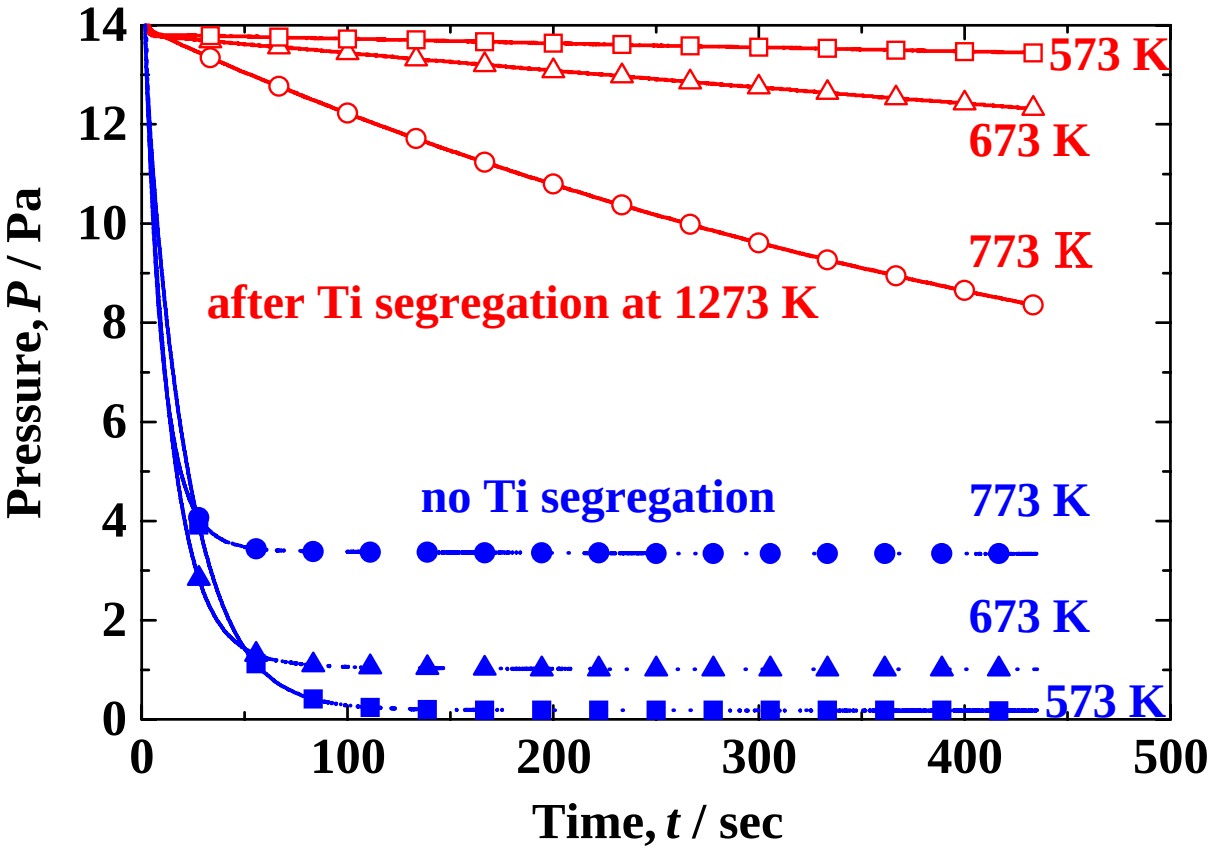

Typical examples of absorption curves.

Without Ti surface segregation:

H_2 was absorbed rapidly, and equilibrium was attained within 150 s.

With Ti surface segregation:

H_2 absorption was markedly retarded. Equilibrium was not attained for several hours at low temperature region.

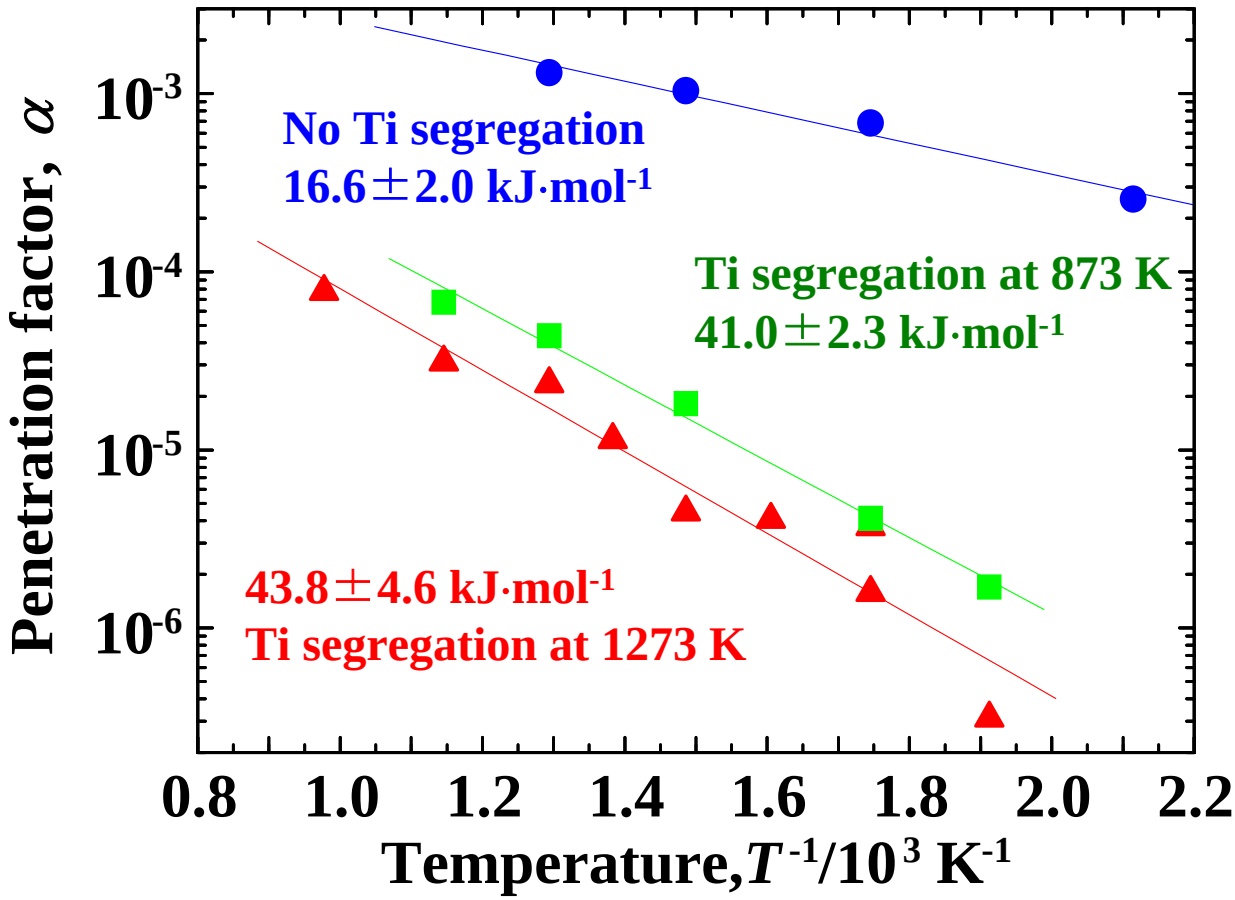

Temperature dependence of penetration factor α of H_2 determined from the initial slopes of absorption curves.

$$\text{Penetration factor } \alpha = \frac{H_2 \text{ flux absorbed into the specimen}}{H_2 \text{ flux striking the specimen surface}}$$

α was reduced by Ti segregation by 2-3 orders of magnitude. Such marked reduction was ascribed to the formation of Ti oxide layer through the reaction with the residual water vapor.

Conclusions

(1) Ti was segregated just by heating in vacuum up to 50 at% (at 1273 K).

(2) Ti at the surface was selectively oxidized at low oxygen pressures (10^{-5} Pa at 573 K and 10^{-4} Pa at 773 K).

(3) Hydrogen ingress into V-4%Ti alloy was significantly retarded by surface segregation of Ti in a wide temperature range in presence of water vapor of 10^{-5} Pa.

Future plan

(1) Barrier effect of surface Ti on oxygen ingress.

(2) Ternary V-Ti-Cr alloy (NIFS-HEAT-2).

(3) Other metals whose oxides are more stable than Ti ones.