ORNL/M-4908

IFMIF
International Fusion Materials Irradiation Facility
Conceptual Design Activity

Interim Report

An activity of:
The International Energy Agency (IEA)
Implementing Agreement for a Programme of
Research and Development on Fusion Materials

MASTER

DISTRIBUTION OF THIS DOCUMENT IS UNLIMITED

Report compiled by
M.J. Rennich
Oak Ridge National Laboratory
Oak Ridge, Tennessee, U.S.A.

Published by
The University of Tennessee
Knoxville, Tennessee

December 1995

DISCLAIMER

This report was prepared as an account of work sponsored by an agency of the United States Government. Neither the United States Government nor any agency thereof, nor any of their employees, makes any warranty, express or implied, or assumes any legal liability or responsibility for the accuracy, completeness, or usefulness of any information, apparatus, product, or process disclosed, or represents that its use would not infringe privately owned rights. Reference herein to any specific commercial product, process, or service by trade name, trademark, manufacturer, or otherwise does not necessarily constitute or imply its endorsement, recommendation, or favoring by the United States Government or any agency thereof. The views and opinions of authors expressed herein do not necessarily state or reflect those of the United States Government or any agency thereof.

DISCLAIMER

Portions of this document may be illegible in electronic image products. Images are produced from the best available original document.

PREFACE

This IFMIF Conceptual Design Activity Interim Report is the first draft of the final report which is scheduled for completion in January, 1997. The report outline includes all sections of the final report even though major activities such as the cost estimate and schedule have not yet begun. This draft primarily addresses the technical description of the baseline design concept. It has not been submitted for formal editing, review or approval by any of the Parties. It has been prepared for internal use by the project team where it is primarily intended to serve as the basis for the completion of the CDA.

Acknowledgements
Table of Contents
List of Figures
List of Tables
Acronyms
EXECUTIVE SUMMARY
1. 0. 0. INTRODUCTION
1. 0. Mission
1. Objective
2. Background and Scope
2. 0. General Facility Requirements
1. Performance Requirements
2. Operational Requirements
3. Environmental, Safety, And Health (ES&H) Requirements
4. Reliability, Availability, And Maintainability (RAM) Requirements
5. Quality Assurance (QA) Program Requirements
6. Structural Requirements
7. Facility Expansion
8. Future Applications
9. Decontamination And Decommissioning Requirements
3. 0. Project Organization
1. International Collaboration
2. Roles and Responsiblities
3. CDA Schedule
4. Communication Protocols and Software
5. Project Documentation
2. 0. 0. PROJECT DESCRIPTION
1. 0. Project Overview
1. IFMIF Configuration
2. FMIF Facility Description and Expansion Option
3. Personnel and Staffing
4. Overview of RAM
5. Overview of Safety
6. Summary of Key Development Issues
7. Summary of Significant Alternative
2. 0. User Requirements
1. Introduction
2. Materials
3 Types of Experiments
4. Small Specimen Test Technology
5. Irradiation Conditions
6. References
3. 0. Operational Requirements
1. Hot Test Period
2. Normal Operations
3. Maintenance Operations
4. Off-normal Operations
4. 0. Test Facilities
1. Facility Requirements
2. Facility Description
3 Interfaces
4. Safety Considerations
5. RAM Considerations
6. Fabrication, Assembly and Installation
7. Development Requirements

8. Summary of Alternatives
9. References

5. 0. Target Facilities
1. Facility Requirements
2. Facility Description
3. Interfaces
4. Safety Considerations
5. RAM Considerations
6. Fabrication, Assembly and Installation
7. Development Requirements
8. Summary of Alternatives
9. References

6. 0. Accelerator Facilities
1. Requirements
2. System Description
3. Interfaces
4. Safety Considerations
5. RAM Considerations
6. Fabrication and Assembly
7. Development Requirements
8. Summary of Alternatives
9. References

7. 0. Conventional Facilities
1. Facility Requirements
2. System Description
3. Facility Interfaces
4. Safety Considerations
5. RAM Considerations
6. Shielding Considerations
7. Construction

8. 0. Central I&C Systems
1. Requirements
2. System Description
3. Interfaces and Interface Issues
4. Safety Considerations
5. RAM and Quality Considerations
6. Fabrication, Assembly and Installation
7. Development Requirements
8. Summary of Alternatives
9. References

3. 0. 0. ASSESSMENTS
1. 0. Safety Analysis
2. 0. Environmental Analysis
3. 0. Quality Assurance
4. 0. Selection and Characterization of Candidate Site

4. 0. 0. PROJECT SCHEDULE

5. 0. 0. SUMMARY OF COST ESTIMATE

Appendix: Work Breakdown Structure

Acknowledgment

The initial draft of the Interim CDA Report was prepared at the two week design integration meeting held at ORNL from Oct. 16 to 27, 1995 by the following group of IFMIF participants. The editing and final preparation of the document was also primarily the combined effort of the same individuals during the two month period following the meeting.

Design Integration Group

T.E. Shannon, Leader

H. Maekawa

M. Martone

S. Mendelsohn

S. Monti

M.J. Rennich

S.L. Thomson

Test Cell/Users Group

A. Möslang, Leader

E. Daum

I.C. Gomes

J.R. Haines

S. Jitsukawa

K. Noda

S.J. Zinkle

J.R. Viola-Teres

K. Ehrlich

Target Group

H. Katsuta, Leader

S. Cevolani

L. Green

Y. Hoshi

T. Hua

Y. Kato

S. Konoshi

D.L. Smith

Accelerator Group

R.A. Jameson, Leader

D. Berwald

M. Sugimoto

C. Piaszczyk

List of Figures

1.3.1-1 CDA organization chart
1.3.2-1 CDA responsibilities matrix
2.1.1-1 Schematic layout of IFMIF
2.1.1-2 Interface of IFMIF facilities in Test Cell
2.1.2-1 IFMIF plant layout, plan view of first floor
2.1.2-2 IFMIF plant layout, plan view of second floor
2.1.2-3 IFMIF elevation section view thru center of Test Cell #1
2.1.2-4 IFMIF plan view of expanded configuration
2.2.4-1 Summary of proposed specimen geometries of mechanical and physical property tests on specimens irradiated in the high-flux region of IFMIF
2.2.4-2 Various types of ceramic breed specimens
2.2.5-1 Test Cell Configuration
2.2.5-2 Displacement damage of different materials in a first wall spectrum of ITER and DEMO

2.3.1-1 Candidate test cycles to verify the lithium cooling system
2.3.1-2 Hot test period schedule
2.3.2-1 Two target arrangement
2.3.2-2 Beam turn-on/turn-off timing
2.3.2-3 Normal startup time chart
2.3.4-1 Single beam failure
2.3.4-2 Dual beam failure
2.4.2-1 Plan view of Test Facilities
2.4.2-2 Elevation view of Test Facilities
2.4.2-3 Elevation section view of Test Cell
2.4.2-4 Plan view of Test Cell
2.4.2-5 Arrangement of modules 1-5 VTAs in the Test Cell
2.4.2-6 Design concept for integrating the VTAs with Test Cell shielding
2.4.2-7 Design configuration for VTA 1 including the high-flux test module
2.4.2-8 NaK-cooled high-flux test module configuration w/3 chambers
2.4.2-9 Typical NaK-cooled high-flux test chamber w/specimen packets
2.4.2-10 In-situ test configurations
2.4.2-11 Plan View of tritium facility
2.4.2-12 Bird's eye view of tritium facility
2.4.2-13 Tritium removal facility process flow diagram
2.4.5-1 RAM model of the compressor/heat exchanger branch of the He cooled rest system
2.4.5-2 RAM model of the VTA No. 1 in the NaK cooled test system
2.5.2-1 Baseline replaceable backwall lithium target assembly
2.5.2-2a Enlarged view of the beam-on-target region
2.5.2-2b Enlarged view of the beam-on-target region with curved backwall
2.5.2-3a Attachment of replaceable backwall to target assembly
2.5.2-3b Attachment of replaceable backwall to target assembly-cutout view
2.5.2-4 Detail of replaceable backwall
2.5.2-5 FMIT-type target assembly
2.5.2-6 Free jet target assembly
2.5.2-7 Lithium circulation system concept
2.5.2-8 Cross section layout of Test and lithium cells
2.5.2-9 Lithium purification sub-loop

2.5.2-10 Lithium loop impurity monitoring sub-loop
2.5.3-1 Manipulator system inside Test Cell
2.5.5-1 RAM model of the lithium impurity removal loop
2.5.6-1 General concept for primary system fabrication and installation
2.6.2-1 IFMIF accelerator general arrangement (plan view)
2.6.2-2 IFMIF accelerator layout
2.6.2-3 Dual ion injector layout
2.6.2-4 IFMIF RFQ
2.6.2-5 Major features of the DTL
2.6.2-6 RF power subsystem block diagram
2.6.2-7 RF power subsystem
2.6.2-8 Detailed block diagram of rf station
2.6.2-9 RF transport configurations
2.6.2-10 Mechanical layout
2.6.3-1 Beam profile requirement: vertical direction
2.6.3-2 Beam profile requirement: horizontal direction
2.6.3-3 PARMILA simulation of ESNIT beam profile on target
2.6.3-4 Normalized probability density of particles entering dispersion cavity
2.6.3-5 Normalized probability density of particles leaving dispersion cavity
2.6.3-6 IFMIF four beam arrangement end view at dipole bend to target
2.6.3-7 Divergence of neutron source geometry for target distance of 14-m and beam bending angle of 10 degrees
2.6.3-8 Neutron backstreaming geometry-10 deg. bend half angle
2.6.3-9 Neutron backstreaming geometry-20.4 deg. bend half angle
2.6.3-10 Typical beam pulse form for 2% duty factor, 20 Hz operation
2.6.5-1 RAM model of the IFMIF accelerator system
2.6.5-2 The RAM model of the ion source
2.6.5-3 RAM model of the DTL
2.6.5-4 RAM model of the rf system
2.6.5-5 RAM model of the DTL rf system
2.6.5-6 RAM model of the high voltage power supply system
2.6.5-7 RAM model of the HEBT system
2.6.5-8 Predicted repair frequencies
2.8.1-1 Central control computer system

List of Tables

2.1.3-1 Personnel listing
2.2.1-1 Requirements for an intense neutron source
2.2.2-1 A possible test matrix of first wall and blanket structural materials in the high flux region of IFMIF
2.2.3-1 PIE tests for ceramic breeders
2.2.5-1 Irradiation parameters for the different materials to be tested in IFMIF
2.2.5-2 Displacement damage of different materials in a first wall spectrum of ITER and DEMO
2.2.5-3 Summary of possible high-flux specimen matrix for one material condition
2.2.5-4 Volumes of specimens and specimen packets
2.2.5-5 SPECTER calculations for damage and transmutation products using first wall spectra provided by 3D Monte Carlo calculations
2.2.5-6 Comparison of gas production rates for a first wall loading of 2 MWy/m2
2.2.5-7 Test matrices of ceramic breeders
2.2.5-8 Specimen and capsule volumes
2.4.2-1 Material test specimens in reference high-flux module
2.4.2-2 Helium coolant parameters
2.4.2-3 Summary of post irradiation examination test equip. & estimated space requirements
2.4.4-1 FMEA factors
2.4.4-2 FMEA analysis for the Test Facilities
2.4.5-1 Failure rates (per hour) for major He cooled test system components
2.4.5-2 Failure rates (per hour) for major NaK cooled test system components
2.4.5-3 Availability data for major He cooled test system components
2.5.2-1 Lithium jet parameters
2.5.2-2 Approximate main loop component dimensions
2.5.4-1 FMEA factors
2.5.4-2 FMEA analysis for Target Facility
2.5.5-1 Failure rates (per hour) for major lithium target components
2.5.5-2 Availability data for major lithium target components
2.5.5-3 Summary of the availability and reliability calculations for the lithium target system
2.6.1-1 Top-level performance requirements for IFMIF accelerators
2.6.2-1 Top-level performance requirements for IFMIF ion injectors
2.6.2-2 Top-level performance requirements for IFMIF RFQ
2.6.2-3 Top-level performance requirements for IFMIF DTL
2.6.2-4 Top-level performance requirements for IFMIF HEBT
2.6.2-5 RF station requirements
2.6.2-6 RF station cooling
2.6.2-7 RF station ac prime power
2.6.2-8 Top-level performance requirements for IFMIF HEBT
2.6.3-1 Accelerator Facility interface matrix
2.6.3-2 Accelerator Facility - Target Facility interface matrix
2.6.3-3 Beam power deposited in target
2.6.3-4 Accelerator vault interfaces
2.6.3-5 Beam turning vault interfaces
2.6.3-6 Beam steering vault interfaces
2.6.3-7 Final beam calibration dump interfaces
2.6.3-8 RF power room interfaces

2.6.3-9 auxiliary power room interfaces
2.6.3-10 Dose Rates at 30 cm from 3 μA/m losses of 35 MeV deuterons on copper (0.01% duty factor operation)
2.6.4-1 FMEA factors
2.6.5-1 Failure rates (per hour) for major accelerator components
2.6.5-2 Availability data for accelerator system components
2.6.5-3 Summary of the availability and reliability calculations for the injector system
2.6.5-4 Summary of the availability and reliability calculations for the linac system
2.6.5-5 Summary of the availability and reliability calculations for the rf system
2.6.5-6 Summary of the availability and reliability calculations for the HEBT system
2.7.4-1 FMEA factors
2.7.4-2 FMEA analysis of conventional facilities

ACRONYMS

ac	-	Alternating Current
ALARA	-	As Low As Reasonably Achievable
ALIP	-	Annular Linear Induction Pump
ASM	-	Accelerator System Model
ASME	-	American Society of Mechanical Engineers
CCC	-	Central Control Computer
CCDTL	-	Coupled Cavity Drift Tube Linac
CDA	-	Conceptual Design Activity
D-D	-	Deuterium-Deuterium
D-Li	-	Deuterium-Lithium
DC	-	Direct Current
DOE	-	Department of Energy
dpa	-	Displacements Per Atom
DT	-	Deuterium-Tritium
DTL	-	Drift Tube Linac
ECH	-	Electron Cyclotron Heating
ECR	-	Electron Cyclotron Resonance
ECRH	-	Electron Cyclotron Resonance Heating
ELS	-	Experimental Lithium System
EMP	-	Electromagnetic Pump
EMQ	-	Electromagnetic Quadrupoles
EPICS	-	Experim'l Physics and Indust'l Control Sys.
ES&H	-	Environmental, Safety, and Health
FBR	-	Fast Breeder Reactor
FERMI	-	FERMI National Accelerator Laboratory
FMEA	-	Failure Modes and Effects Analysis
FMEC	-	Fusion Materials Executive Committee
FMIT	-	Fusion Materials Irradiation Test
FPY	-	Full Power Year
FTO	-	Failure to Operate
FTP	-	File Transfer Protocol
FWHM	-	Full Width at Half Maximum
GB	-	Glove Box
HEBT	-	High Energy Beam Transport
HEDL	-	Hanford Engineering Develop.Laboratory
HEPA	-	High Efficiency Particle Absorber
HV	-	High Voltage
HVAC	-	Heating, Ventilation, and Air Conditioning
HX	-	Heat Exchanger
Hz	-	Hertz (cycles/min)
I&C	-	Instrumentation and Controls
I/O	-	Input/Output
IASCC	-	Irrad. Assisted Stress Corrosion Cracking
IEA	-	International Energy Agency
IFMIF	-	Intern'l Fusion Materials Irradiation Fac.
IOT	-	Inductive Output Tube
IR	-	Infrared
ITER	-	International Tokamak Experiment Reactor
LAN	-	Local Area Network
LANL	-	Los Alamos National Laboratory
LEBT	-	Low Energy Beam Transport
Li	-	Lithium
mS	-	Milliseconds
MTBF	-	Mean Time Between Failures
MTR	-	Materials Testing Reactor
MTTR	-	Mean Time To Repair
MVA	-	MegaVolt-Amps
NaK	-	Potassium-Sodium
NPSH	-	Net Positive Suction Head
PIE	-	Post Irradiation Examination
PKA	-	Primary Knocked-on Atoms
PWR	-	Pressurized Water Reactor
QA	-	Quality Assurance
QPMS	-	Quadrupole Mass Spectrometer
R&D	-	Research and Development
RAM	-	Reliability, Availability, Maintainability
rf	-	Radio Frequency
RFPS	-	Radio Frequency Power Subsystem
RFQ	-	Radio Frequency Quadrupole
RIC	-	Radiation Induced Conductivity
RIED	-	Radiation Induced Electrical Degradation
RIS	-	Radiation induced segregation
RT	-	Room Temperature
SEM	-	Scanning Electron Microscopy
SS	-	Stainless Steel
SSRT	-	Slow Strain Rate Tensile Test
SSTT	-	Small Specimen Test Technology
TBD	-	To Be Determined
TEM	-	Transmission Electron Microscopy
TV	-	Television
UCC	-	User Control Computer
VSWR	-	Voltage Standing Wave Ratio
VTA	-	Vertical Test Assembly
WBS	-	Work Breakdown Structure

EXECUTIVE SUMMARY

MISSION

Environmental acceptability, safety, and economic viability will ultimately be the keys to the widespread introduction of fusion power. This will entail the development of radiation-resistant and low-activation materials. These low-activation materials must also survive exposure to damage from neutrons having an energy spectrum peaked near 14 MeV with annual radiation doses in the range of 20 displacements per atom (dpa). Testing of candidate materials, therefore, requires a high-flux source of high energy neutrons. The problem is that there is currently no high-flux source of neutrons in the energy range above a few MeV. The goal, is therefore, to provide an irradiation facility for use by fusion material scientists in the search for low-activation and damage-resistant materials. An accelerator-based neutron source has been established through a number of international studies and workshops[1] as an essential step for materials development and testing.

The mission of the International Fusion Materials Irradiation Facility (IFMIF) is to provide an accelerator-based, deuterium-lithium (D-Li) neutron source to produce high energy neutrons at sufficient intensity and irradiation volume to test samples of candidate materials up to about a full lifetime of anticipated use in fusion energy reactors.

IFMIF would also provide calibration and validation of data from fission reactor and other accelerator-based irradiation tests. It would generate material-specific activation and radiological properties data, and support the analysis of materials for use in safety, maintenance, recycling, decommissioning, and waste disposal systems.

CONCEPTUAL DESIGN ACTIVITY

The objective of IFMIF conceptual design activity (CDA) is to provide a reference design and a project basis satisfying the mission and the requirements for a facility as described above. The CDA is being carried out under the direction of a subcommittee of the International Energy Agency (IEA), Executive Committee on Fusion Materials. The design team consists of specialists in all technical areas relevant to IFMIF, working, most of the time in their home institutions in Europe, Japan, the United States and the Russian Federation. The design work is being done over a 2-year period, 1995—96, through a series of technical meetings and workshops in which tasks are defined and discussed and to be completed at the home institutions. After a joint technical preparation workshop held in Europe in September 1994, specific area meetings were held during the summer of 1995 in Europe (test facilities), Japan (target systems), and the United States (accelerator). The initial baseline design concept was developed during a 2-week design integration workshop, October 16—27,1995, at Oak Ridge National Laboratory. The first draft of the interim report was also produced during that workshop. The entire CDA effort will be accomplished with a work force of approximately 25 person years per year.

The work breakdown structure (WBS) for the project has four major elements that define the technical focus for the CDA as follows:

- Project management/design integration,
- test facilities,
- target facilities, and
- accelerator facilities.

The schedule of meetings and activities for the CDA is as follows:

Form international procedural concept	June	1994
Formulate initial requirements and CDA tasks	Sept.	1994
Preliminary system design layouts		
Test facilities	July	1995
Target system	July	1995
Accelerator system	Sept.	1995
Design integration workshop		
Design layout and establish baseline design	Oct.	1995
Interim report	Dec.	1995
Preliminary project plan and cost estimate	May	1996
Final design integration workshop		
Update baseline design, plan, and cost	Oct.	1996
Conceptual design report	Jan.	1997

The CDA relies on an international electronic network system for communication among the project groups of various countries and institutions. To set up an efficient communication system, protocols and software have been specified. The basic set includes: EUDORA for E-Mail; Word 5.1 for text format, EXCEL 4.0 for spreadsheet format, and AUTOCAD 12 (.DXF) format for drawings. A computer server has been set up at ENEA-Frascati where project documents (reports, drawings, etc.) released from project management are stored and easily accessible to all the project participants.

In addition to providing up-to-date design information, the common server could provide the design team with a data base of supporting information, such as technical reports and results of research and development programs. The files from the Fusion Materials Irradiation Test (FMIT) Project, recently made available to the IFMIF team by the U.S. Department of Energy (DOE), is an example of a large data base that could be transferred to this system.

DESIGN CONCEPT

USER REQUIREMENTS

The design concept for IFMIF is based on input from the materials community on the estimated test volume required to obtain useful irradiation data in a reasonably short operating time. Detailed design studies of the test assembly indicate that a test volume of about 0.5 L is required in a region producing a flux equivalent to 2 MW/m^2 (0.9×10^{18} n/m^2-s, uncollided flux) or greater. A fraction of this volume, about 0.1L is available at a flux equivalent to 5 MW/m^2 for accelerated testing.

The accelerator system will provide deuterons at 30, 35, or 40 MeV. Neutronics calculations indicate that 40 MeV deuterons provide the maximum high-flux irradiation volume and provide a reasonable simulation of the fusion energy gaseous and solid transmutation rates in most metallic components. Some of the transmutation components in ceramic materials are best simulated with 30 or 35 MeV deuterons. The flexibility of choosing deuteron energies between 30 and 40 MeV during irradiation campaigns allows the influence of certain transmutation products to be identified.

An estimate of the test volume and the corresponding displacement rate in a test assembly with iron-based specimens is as follows:

0.1L >	50	dpa/year
0.4L >	20	dpa/year
3.0L >	5	dpa/year
10.0L <	1	dpa/year

A quasi-continuous operation is mandatory. Annealing times of point defects shorter than the repetition time of pulses and rate effects in the case of low duty-cycle sources would introduce unacceptable uncertainties in the observed radiation effects. It is planned that IFMIF will operate with two accelerators providing identical overlapping beam footprints on either one of the two lithium targets. This configuration minimizes flux perturbations caused by a beam-off transient in one of the accelerators (i.e., the maximum likely temporal variation in the flux would be a factor of 2).

Because of the level of uncertainty in the amount of testing and development needed to characterize the damage effect of 14 MeV neutrons, the IFMIF facility has been designed from the outset to accommodate a possible future expansion in irradiation capacity and test volume. Two additional accelerators can be added so that two test assemblies could be irradiated simultaneously. The lithium system can be expanded so that both target systems can operate at the same time. At full-power operation, this expansion would double the test volume for the displacement rates as shown above. If needed, this additional volume would allow much more flexibility in the range of operating conditions within the test assemblies and thereby significantly reduce the time to characterize and test new material options.

TEST ASSEMBLY

As shown in Fig. 1, the IFMIF Test Cell will contain five modular assemblies located in the neutron fluence (other exposure tests may be placed behind the modules). Each module is supported by a selfcontained cooling/shielding arrangements that can be removed and replaced with vertical access and are thus referred to as vertical test assemblies (VTAs). The five VTAs including the specimen cooling system, instrumentation and controls for the test modules supported off their ends, penetrate through the Test Cell shield plug. The shielding portion of the VTAs consists of a stepped, concrete filled stainless steel liner. As illustrated in Fig. 2, steps in the Test Cell shield plug conform to the steps in the shielding portion of each VTA to prevent radiation streaming. The floor shield plug is removed by lifting it straight up. Once the floor shield plug has been removed, the VTAs can be lifted out of the Test Cell and into the Test Cell/target access room in any sequence without interfering with the remaining VTAs. The removed VTA can then be transported to a service cell where the test module to provide access to the specimens.

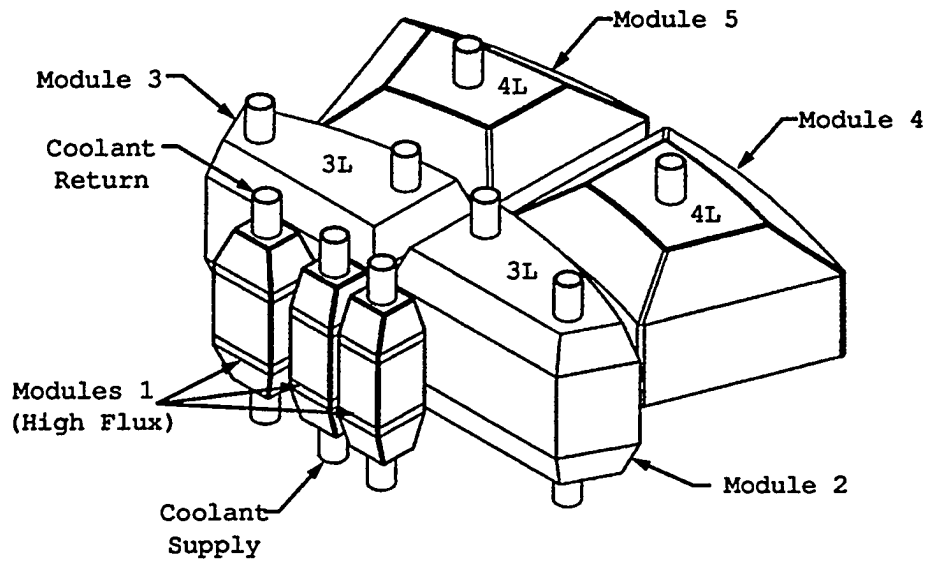

Fig. 1. Test module array.

VTA 1 includes the high-flux module and has been configured to utilize the maximum amount of the available 0.5-L irradiation volume. Because of the need for an active temperature control system packaging of test specimens in this module will depend on the type of coolant to be used– NaK and helium. Each chamber of the high-flux module is cooled by a separate cooling system that is located at the top. Helium will be used for high-temperature irradiation loadings above 600°C, whereas NaK will be used for loadings below 600°C. Each NaK cooling system consists of a 5-L sump tank, a 2.5-kW cooler, a 5-kW heater, and a 100-kg/min induction pump. The coolant supply and return lines between the cooling system and module are contained within the shielding body. Each coolant line passage is stepped to reduce radiation streaming.

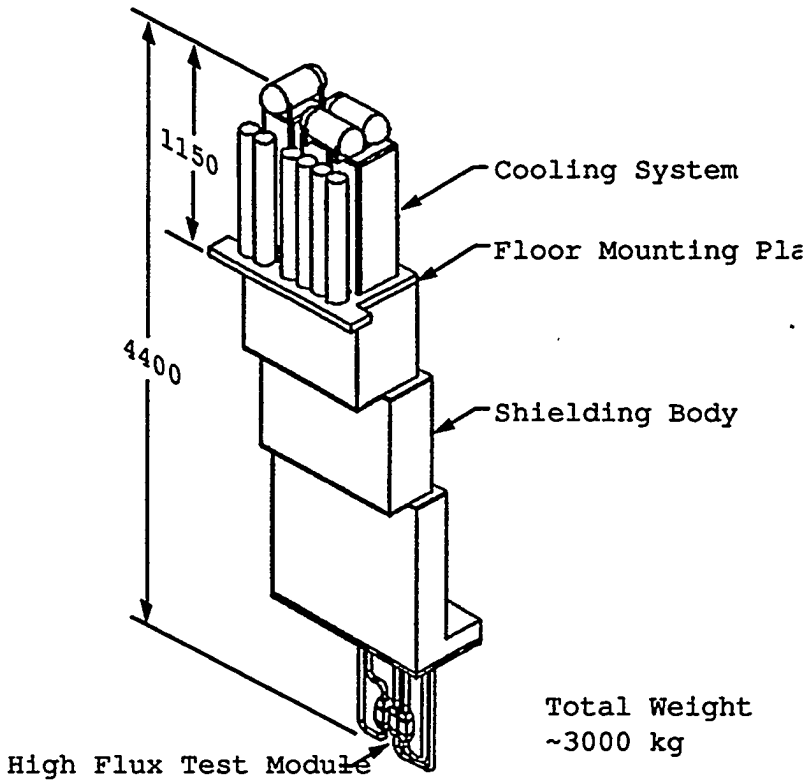

Fig. 2. Vertical test assembly.

LITHIUM TARGET SYSTEM

The lithium target may be divided up into two basic components. The first is the target assembly itself, which must present a stable lithium jet to the beam, where the kinetic energy of the deuteron beam is deposited and where neutrons are produced. The second is the lithium loop, which circulates the lithium to and from the target assembly and removes the heat deposited by the deuteron beam. This loop also contains systems for maintaining the high purity of the loop required for radiological safety and for minimizing corrosion of the loop structure by the hot flowing lithium. A single lithium loop provides flow to either of the target assemblies in the two Test Cells. A maximum 10% flow is provided to the inoperative target for decay heat removal. The target assembly and lithium loop will be briefly described.

The target assembly, shown in Fig. 3, consists of the inlet pipe, the transition component from inlet pipe to flow straightener, the flow straightener, the nozzle, the backwall, the downstream diffuser with built-in drain baffles, and a vacuum port for connection to the deuteron beam tube. The total vertical distance from the highest point of the inlet pipe to the beam centerline is about 1.5 m. For a 40 MeV deuteron beam and a beam footprint of 5 x 20 cm^2, the nozzle lip dimensions will be 2.4 cm thick and 26 cm wide. Based upon a thorough assessment of various target designs, the modified FMIT-type target with a replaceable backwall has been selected for the baseline design. In addition there are two alternative options: (1) a scale-up version of the original FMIT target and (2) a free jet target.

The replaceable backwall is bolted to the back and sides of the target assembly. Seals around the edges will be needed to maintain different vacuum conditions in the target chamber (10^{-3} Pa) and in the Test Cell ($\sim 10^{-1}$ Pa). The target assembly, with exception of the replaceable backwall, is designed to withstand neutron damage for a potential 20-years lifetime. To minimize the effect of neutron damage, permanent structural components are at least 10 cm away from the beam footprint. Part of the assembly sidewalls will be separately cooled on the outside by routing a small lithium stream from the inlet pipe. Because there is no welding, the replaceable backwall can be made of a different material if desired. For example a combination of ferritic steel target assembly and vanadium alloy backwall could increase the target system lifetime.

Table 1. Lithium jet parameters

Jet thickness, m	0.024
Jet width, m	0.26
Jet velocity, m/s	15 (range 10-20)
Inlet temperature, ^{o}C	250
Outlet temperature, ^{o}C	300 (for 15 m/s)
Surface temperature, ^{o}C	290 (for 15 m/s)
Peak temperature, ^{o}C	400 (for 15 m/s)
Beam Footprint, cm	5 x 20

The lithium loop is divided into three basic functional systems. The first is the main loop, which circulates the lithium to and from the target assembly with the parameters shown in Table 1. Two targets are assumed, since the loop must be able to deliver flow to either of the Test Cells. The major components in this loop are the target quench tank, the surge or overflow tank, the lithium dump tank, the organic dump tank, the main electromagnetic pump, and the two heat exchangers. All of the piping and tanks are constructed of austenitic stainless steel (either 304 or 316). There are, in addition, a trace heating system, to maintain the temperature throughout the loop above the melting point of the lithium at all times the metal is present in the loop, thermal insulation, valves, electromagnetic flow meters, instrumentation, and connections to vacuum and argon headers. The total lithium inventory is 12,600 L.

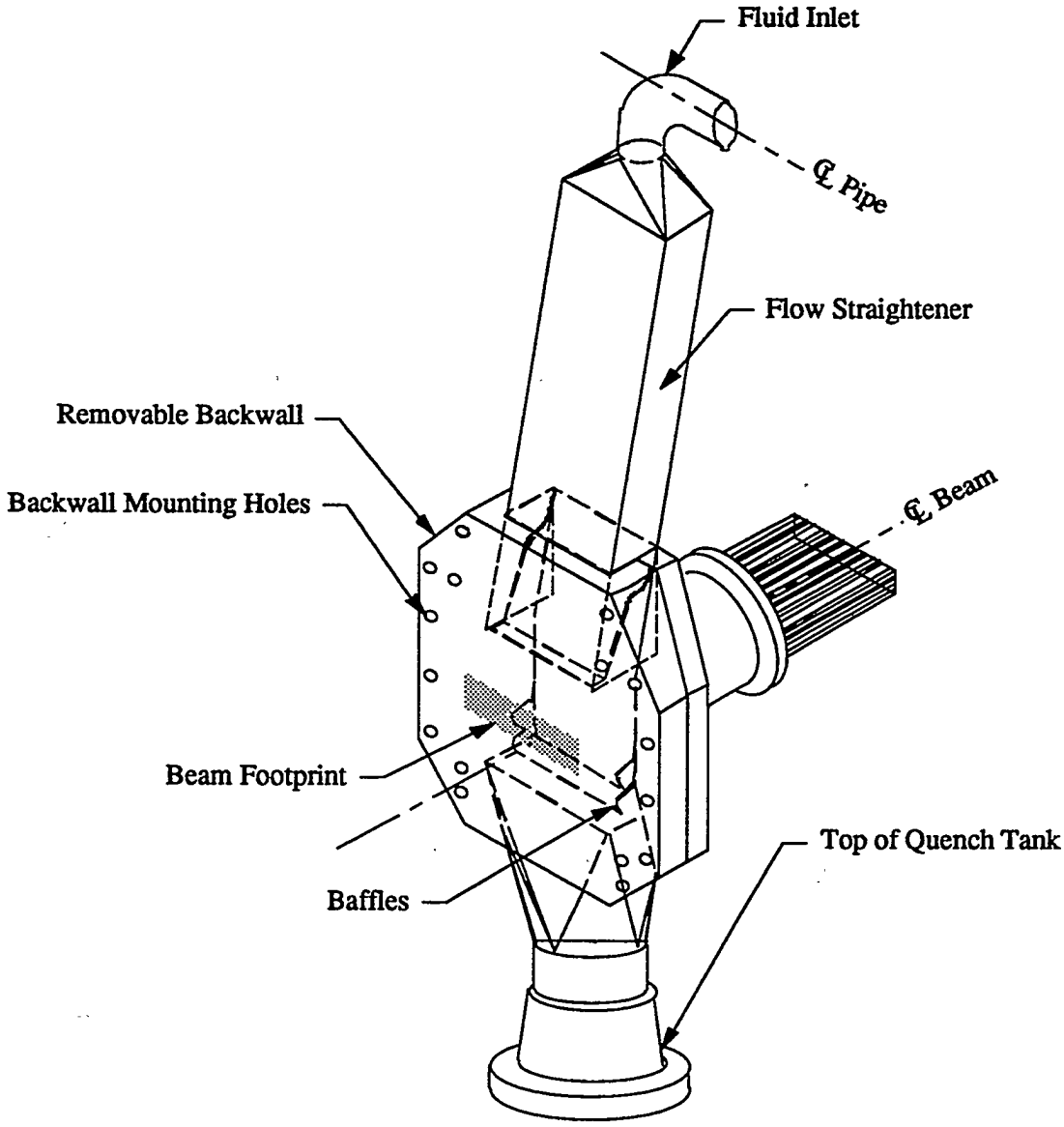

Fig. 3. Target assembly with removable backwall

ACCELERATOR SYSTEM

The IFMIF requirement for 250 mA of deuteron beam current delivered to the target will be met by two 125-mA, 40-MeV accelerator modules operating in parallel. This technological approach is conservative with respect to the current capabilities of rf linac technology and provides operational redundancy by allowing operation to continue at 125 mA when one or the other of the two accelerators is temporarily removed from service for repair. Each 125-mA accelerator is designed with sufficient derating but not with a significant upgrade capability. Additional beam current, if desired, would be provided by adding additional 125-mA modules.

The IFMIF deuteron accelerator, shown in Fig. 4 (plan and elevation views), comprises a sequence of acceleration and beam transport stages. Dual ion sources (operating and standby) generate a cw 140-mA deuteron beam at 100 keV. A low-energy-beam-transport (LEBT) guides the deuteron beam from the operating source to a radio-frequency-quadrupole (RFQ). The RFQ bunches the beam and accelerates 125 mA to 8 MeV. The 8 MeV RFQ beam is injected directly into a room-temperature (RT), drift-tube-linac (DTL) of the conventional Alvarez type with post couplers, where it is accelerated to 30, 35, or 40 MeV.

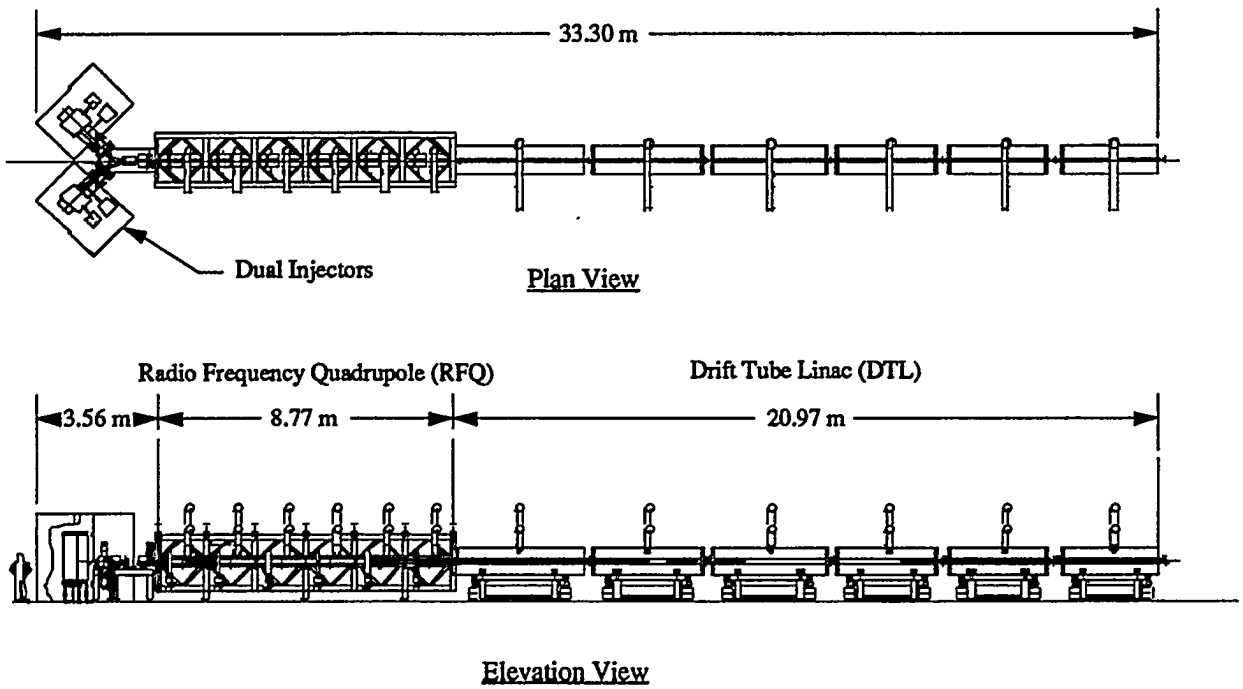

Fig. 4. Accelerator configuration.

The baseline rf power system for the IFMIF accelerator is the existing Eimac 4CM2500KG tetrode (or equivalent), operated at a power level of 1.3 MW and a frequency of 175 MHz. Operation of both the RFQ and the DTL at the same relatively low frequency is a conservative approach for delivering the high current deuteron beam with low beam loss in the accelerator. This will facilitate the achievement of "hands-on" maintainability without remote manipulators. The use of only one rf frequency also provides some operational simplification.

The DTL output beam is carried to either of the targets or to the tune-up beam calibration station by a high-energy-beam-transport (HEBT) that also provides the desired target spot distribution tailoring and energy dispersion.

Extensive trade-off studies have been conducted on this baseline design, using the accelerator system model (ASM). ASM is a new code that allows consideration of physics, engineering, cost, and reliability, availability, maintainability (RAM) information in a consistent framework for the first time.

REFERENCE

1. T. E. Shannon, F. Cozzani, D. H. Crandall, K. Ehrlich, H. Katsuta, T. Kondo, V. Teplyakov, F. W. Wiffen, and L. Zavialsky, The International Fusion Materials Irradiation Facility, *Proceedings of the Fifteenth International Conference on Plasma Physics and Controlled Nuclear Fusion Research*, Seville, Spain, September 26-October 1, 1994,. to be published in *Nucl Fusion.*

1. INTRODUCTION

This document describes the conceptual design and project basis for the proposed International Fusion Materials Irradiation Facility (IFMIF). The work was carried out under the direction of a subcommittee of the International Energy Agency (IEA), Executive Committee on Fusion Materials. The design team consisted of representatives of four groups organized by Europe, Japan, Russia ,and the United States. The design work is being performed over a 2-year period, 1995—96, through a series of technical meetings and workshops in which tasks are defined and discussed and later carried out at the home institutions. The initial design integration was done in a 2-week period, October 16—27, 1995. The entire design effort was accomplished with a work force of approximately 25 person years per year.

1.1 MISSION

The mission of the IFMIF is to provide an accelerator-based, deuterium-lithium (D-Li) neutron source to produce high energy neutrons at sufficient intensity and irradiation volume to test samples of candidate materials to a full lifetime of anticipated use in fusion energy reactors.

1.1.1 Objective

The objective of IFMIF conceptual design activity (CDA) is to provide a reference design and project basis for an accelerator-based, D-Li neutron source satisfying the mission and requirements set forth in this document.

1.1.2 Background And Scope

In order for fusion to be acceptable as a major energy source for the future, it must be attractive from the point of view of safety and environmental impact. In order to accomplish this, a new class of low-activation materials must be developed. These materials must also survive bombardment by neutrons having an energy spectrum peaked near 14 MeV with annual radiation doses in the range of 20 displacements per atom (dpa). There is presently no high-flux source of neutrons in the energy range above a few MeV. An accelerator based neutron source is a necessary first step for near-term materials testing and development.

1.2. GENERAL FACILITY REQUIREMENTS

1.2.1 Performance Requirements

1.2.1.1 Fusion Materials Data Development

IFMIF shall support the development and testing of materials for use in future fusion devices through the development of a relevant data base of material properties for use with a design code such as the *ASME Pressure Vessel Code*. The data base shall include properties for both unirradiated and irradiated conditions.

Data shall be developed for the in-situ and post irradiation behavior of candidate materials including:

- microstructure development,
- swelling and irradiation creep,
- radiation hardening and embrittlement,
- post irradiation and in-pile fatigue/creep,
- fracture toughness and fatigue crack growth rates,
- radiation-induced segregation (RIS),
- irradiation-assisted stress-corrosion cracking (IASCC),
- optical properties of fiberoptic and window materials,
- tritium release rate in ceramic breeder materials, and
- electrical and dielectric properties of ceramic insulators.

IFMIF will also provide calibration and validation of data from fission reactor and other accelerator-based simulation irradiations. It must also provide material-specific activation and other radiological properties and analysis of data for safety, maintenance, recycling, decommissioning, and waste disposal. Finally it must perform lifetime tests on candidate materials for fusion reactors.

1.2.1.2 Candidate Materials

Potential structural materials include:

- ferritic/martensitic steel,
- vanadium alloys, and
- SiC/SiC composites.

Additional materials systems that require irradiation testing include:

- blanket (tritium breeding) materials,
- insulator and special purpose materials, and
- divertor and first wall protective materials.

1.2.1.3 Types of Experiments

IFMIF shall provide facilities to perform two basic types of experiments:

- instrumented and parameter controlled in-situ experiments, and
- instrumented irradiation capsules for post irradiation tests.

1.2.1.4 Reference Exposure Conditions

Reference fusion loading conditions are:

- quasi steady-state operation;
- first wall and blanket structural material neutron loading (1 to 5 MW/m^2);
- first wall and blanket structural material integrated loading (10 to 20 MWy/m^2);
- divertor thermal loading (10 MW/m^2); and
- component life-time (10 years)

1.2.1.5 Experimental Exposure Conditions and Expansion Option

IFMIF specimen irradiation exposure conditions shall be matched to reference loading conditions in the test assembly. The initial Accelerator Facility will satisfy the neutron exposure conditions as given below with two beam lines each operating at a current of 125 mA. If there is a need to add additional test volume, a future expansion option will be provided in the design to add two additional beam lines.

1.2.1.5.1 Deuteron energies

The accelerator system shall provide deuterons at 30, 35, or 40 MeV. Neutronics calculations indicate that 40-MeV deuterons provide the maximum high-flux irradiation volume and provide a reasonable simulation of the fusion energy gaseous and solid transmutation rates in most metallic components. Some of the transmutation components in ceramic materials are best simulated with 30 or 35 MeV deuterons. The flexibility of choosing deuteron energies between 30 and 40 MeV during irradiation campaigns allows the influence of certain transmutation products to be identified.

1.2.1.5.2 Irradiation flux

The volume of the high-flux region of the test cell having a flux ≥ 2 MW/m^2 shall be a minimum of 0.4 L.

The flux gradient in the vertical and radial directions of the main irradiation volume shall be $\leq 10\%$/cm

Neutron flux/volume relation is ≥ 0.1 MW/m^2 in 10 L volume neutron and primary knock-on atom spectrum similar to fusion reactor first wall.

1.2.1.5.3 Neutron fluence

The relation between neutron fluence and displacement damage for fusion neutrons is given by: 1 MWy/m^2 ~ 10 dpa$_{NRT}$ in ferritic/martensitic steels and vanadium alloys. Therefore, DEMO-relevant damage levels in structural materials (100 dpa) can be accumulated after irradiation for a few years in the high-flux region of IFMIF.

The neutron spectrum generated by the source should be as close as possible to that in the first wall of a fusion reactor. The energy distribution for other components in a fusion reactor (e.g., blanket, vacuum vessel regions) should be obtainable by spectral tailoring. This should apply to the displacement damage, the energy spectrum of primary knock-on atoms (PKA), and the gaseous and solid transmutation rates.

1.2.1.5.4 Irradiation volume

A volume of about 0.4 L is required in a region producing a flux equivalent to 2 MW/m^2 (0.9 x 10^{18} n/m^2-s, uncollided flux) or greater. A fraction of this volume, about 0.1 L, is available at a flux equivalent to 5 MW/m^2 for accelerated testing. The approximate test volume-displacement rates (Fe) are:

0.1 L	>	50 dpa/year
0.4 L	>	20 dpa/year
3.0 L	>	5 dpa/year
10.0 L	≤	1 dpa/year

1.2.1.5.5 Time structure of neutron flux

A quasi-continuous operation is mandatory. Annealing times of point defects shorter than the repetition time of pulses and rate effects in the case of low duty-cycle sources would introduce unacceptable uncertainties in the observed radiation effects. It is planned that IFMIF will operate with the two accelerators providing identical overlapping beam footprints on the lithium target. This configuration minimizes flux perturbations caused by a beam-off transient in one of the accelerators (i.e., the maximum likely temporal variation in the flux would be a factor of 2).

1.2.2 Operational Requirements

1.2.2.1 User Access and Support

IFMIF shall be available for use by a wide range of materials scientists from the international community. The facility shall provide all necessary services to support the research activities of this group including:

- Complete facility access including office space and appropriate laboratory support.
- Appropriate scheduling of experimental and irradiation time.
- Fabrication support for the preparation of specimens and test fixtures.
- Data retrieval and data storage assistance and support.
- Comprehensive set of equipment for in-situ and post irradiation testing. Much of this equipment will be located in hot cells.

1.2.2.2 Access to Irradiation Volume

The proposed irradiation volume must be available to the experimenters and must allow easy change-out of experimental assemblies in accordance with a prescribed schedule.

1.2.3 Environmental, Safety, And Health (ES&H) Requirements

FMIF is an accelerator-based facility. There are no fissile materials involved; however, activated materials and small quantities of tritium and other radioactive isotopes will be produced.

IFMIF shall be designed, constructed, and operated to applicable ES&H governmental laws and regulations of the country in which it is constructed.

1.2.4 Reliability, Availability, And Maintainability (RAM) Requirements

1.2.4.1 Availability

The IFMIF shall have an overall irradiation capacity of at least 70% of the time after the first 12 months of operation.

The facility shall be shut down for scheduled maintenance no more than 60 d/year after the first 12 months of operation.

IFMIF shall be designed for a 40-year operating life.

1.2.4.2 Reliability

All operating systems shall be designed to achieve optimum availability. Reliability will be designed into all components consistent with the availability needs. For critical components requiring high reliability, large design margins will be used where failure would result in unacceptable times to repair. Remote maintenance, predictive failure techniques, and component redundancy shall be used where necessary to ensure system availability.

1.2.4.3 Maintainability

All systems shall be designed to be maintainable within the reliability and availability guidelines for the facility. The maintainability of each subsystem shall be the responsibility of the subsystem.

All maintenance operations required to achieve the operational availability goal shall be demonstrated prior to completion of the final design.

1.2.5 Quality Assurance (QA) Program Requirements

The QA program will be reviewed by a QA professional.

IFMIF equipment and facilities will be designed, fabricated, and tested in accordance with applicable quality assurance standards.

An overall QA plan will be developed and specific QA plans will be written for:

- design, fabrication, and testing of equipment,
- design and construction of the facility, and
- conduct of experiments.

QA plans will require the approval of the IFMIF program director.

1.2.6 Structural Requirements

IFMIF will be designed, constructed, and tested to appropriate structural codes and standards. Elements and factors that shall be considered are:

- normal operating modes,
- off-normal modes,
- seismic events,
- environmental loading (wind, snow etc.),
- flooding, and
- missile impact.

1.2.7 Facility Expansion

Because of the level of uncertainty in the damage effect of 14-MeV neutrons, the IFMIF facility has been designed from the outset to accommodate a possible future expansion in irradiation capacity and test volume. Two additional accelerators can be added to double the available test volume at full-power operation. Additional lithium capacity would be installed so that both targets and test assemblies could be operated simultaneously. If needed, this additional volume would allow much more flexibility in the range of operating conditions within the test assemblies and thereby significantly reduce the time to characterize and test new material options.

1.2.8 Future Applications

The fundamental goal of IFMIF is to perform lifetime tests on candidate materials for fusion reactors. However, it is anticipated that IFMIF could also provide calibration and validation of data from fission reactor and other accelerator-based irradiation tests. In this role, it would generate material-specific activation and radiological property data, and support the analysis of materials for use in safety, maintenance, recycling, decommissioning, and waste disposal operations.

1.2.9 Decontamination And Decommissioning Requirements

Decontamination and decommissioning shall be performed in a manner that will assure isolation of radioactive contamination and radiation from the human environment. Low-activation materials will be employed in the Accelerator, Target, and Test Cell regions where appropriate. Every part of the accelerator vault, target area, and test cell will be surveyed to identify radioactive components. Three general categories will be identified, as follows:

1. contamination free items,
2. reusable items with some residual activity (for future use), and
3. nonreusable items with residual radioactivity to be shipped to an approved waste disposal site.

1.3 PROJECT ORGANIZATION

1.3.1 International Collaboration

The CDA was carried out under the direction of a subcommittee of the IEA, Executive Committee on Fusion Materials. The design team consisted of four groups organized in Europe, Japan, Russia, and the United States. The design work is being done over a 2-year period, 1995—96, through a series of technical meetings and workshops in which tasks are defined and discussed and to be completed at the home institutions. The initial design integration was done in a 2-week period, October 16—27, 1995. The entire design effort was accomplished with a work force of approximately 25 person years per year. The overall organization chart for the CDA is shown in Fig. 1.3.1-1.

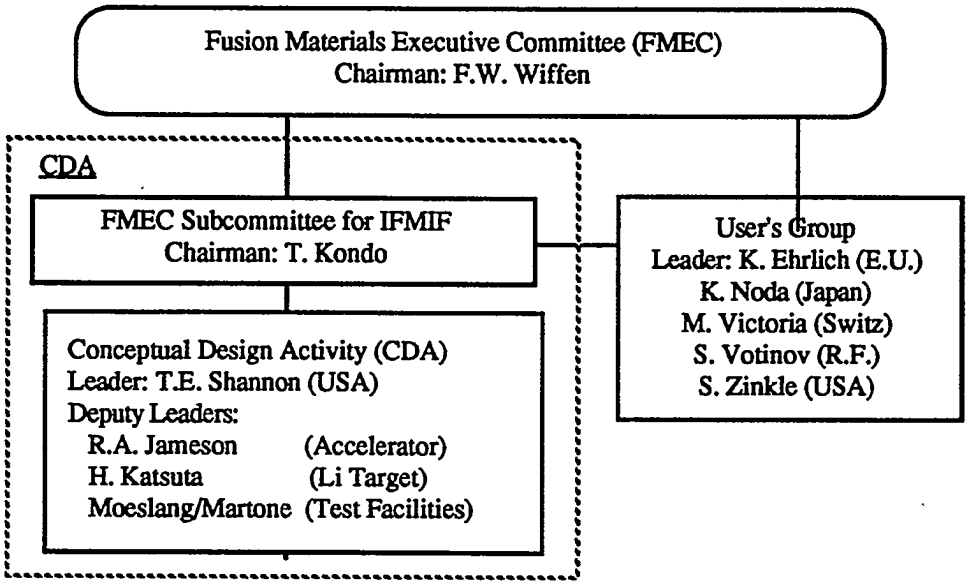

Fig. 1.3.1-1. CDA organization chart.

1.3.2 Roles and Responsibilities

The work breakdown structure (WBS) for the project is based on six major elements as shown below. A complete WBS listing is given in the Appendix.

1. Project management/design integration
2. Test facilities
3. Target facilities
4. Accelerator facilities
5. Central control system
6. Conventional facilities

Individuals within each group were named to lead the overall effort. In addition, individuals were identified to coordinate the work for each element from each of the four groups. This matrix of responsibilities is shown in Fig. 1.3.2-1.

	Design Integration	Test Facilities	Target Facilities	Accelerator Facilities	User Group
European Community	M. Martone	A. Möslang (D), H. Rohrig, M. Martone (D)	H. Rohrig, M. Martone	H. Klein, M. Olivier	K. Ehrlich + one [TBD]
Japan	H. Maekawa	Y. Oyama (K. Noda)	H. Katsuta (D), Y. Kato	M. Sugimoto	K. Noda
United States	T. Shannon (D)	J. Haines	D. Smith	R. Jameson (D)	S. Zinkle
Russia	V. Teplyakov, Y. Prokofiev	V. Chernov, Y. Prokofiev	V. Chernov	V. Teplyakov	S. Votinov, Y. Prokofiev
Switzerland					M. Victoria

Fig. 1.3.2-1. CDA responsiblities matrix.

1.3.3 CDA Schedule

The schedule of meetings and activities for the CDA is shown below:

Form international procedural concept	June	1994
Formulate initial requirements	Sept.	1994
Preliminary system design layouts	May	1995
Design layout and establish baseline design	Sept	1995
Design integration	Oct.	1995
Define engineering development needs; assess environment, safety and site requirements; and estimate cost/schedule for construction		
Conceptual design completed	Jan.	1997

1.3.4 Communication Protocols and Software

The project relies on international electronic network systems for communication among the project groups from various countries and laboratories. In order to set up an efficient communication system, protocols and software have been specified. The basic set includes: EUDORA for E-Mail; Word 5.1 for text format; EXCEL 4.0 for spreadsheet format; and AUTOCAD 12 (.DXF) format for drawings.

1.3.5 Project Documentation

Project documents (reports, drawings, etc.) released from project management, must be safely stored and, at the same time, easily accessible to all project participants. For this purpose an FTP server has been set up at ENEA-Frascati. Access to installed documents is reserved for IFMIF project management, while read-only access is reserved for project deputy leaders. Project team members can request read-only through these representatives.

This system of document storage and transfer will be improved by creating a subdirectory for each facility and by establishing rules for its management as well as rules for document flow and identification.

2.0 PROJECT DESCRIPTION

2.1 Project Overview

2.1.1 IFMIF Configuration

The fundamental criteria that IFMIF will be an accelerator based neutron source results in a plant with five discrete subsystem Facilities.

1. Test Facilities; exposes, packages and examines specimens,
2. Accelerator Facilities; produces accelerated deuterons,
3. Target Facilities; produces a flowing stream of lithium to convert the accelerated deuterons to neutrons,
4. Central Instrumentation and Controls; coordinates and operates the three functional facilities,
5. Conventional Facilities; provides buildings and utilities.

A schematic layout of the three process facilities (Test, Target and Accelerator) is shown in Fig. 2.1.1-1. The Facilities interface only in the Test Cell as shown in Fig. 2.1.1-2; otherwise, they are largely independent and unique. As a consequence of the uniqueness of these systems the project has been grouped according to these facilities at all levels: organizational responsibilities, costing, schedule and design. The breakdown is also used in this document where sections describe all aspects of each facility independently with an interfacing section to define the interactions between the systems.

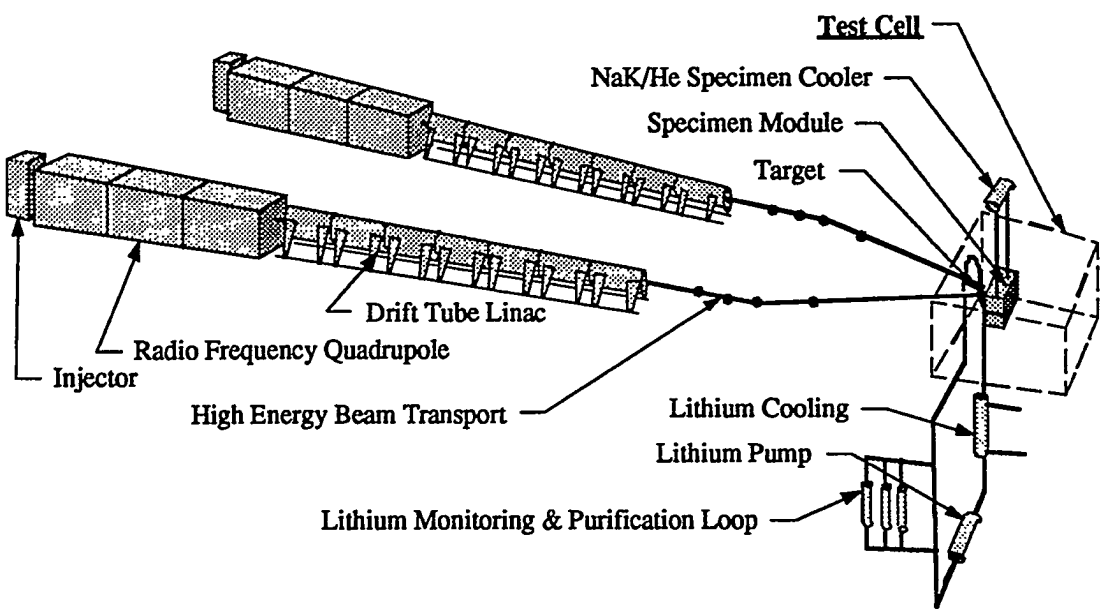

Fig. 2.1.1-1. Schematic Layout of IFMIF.

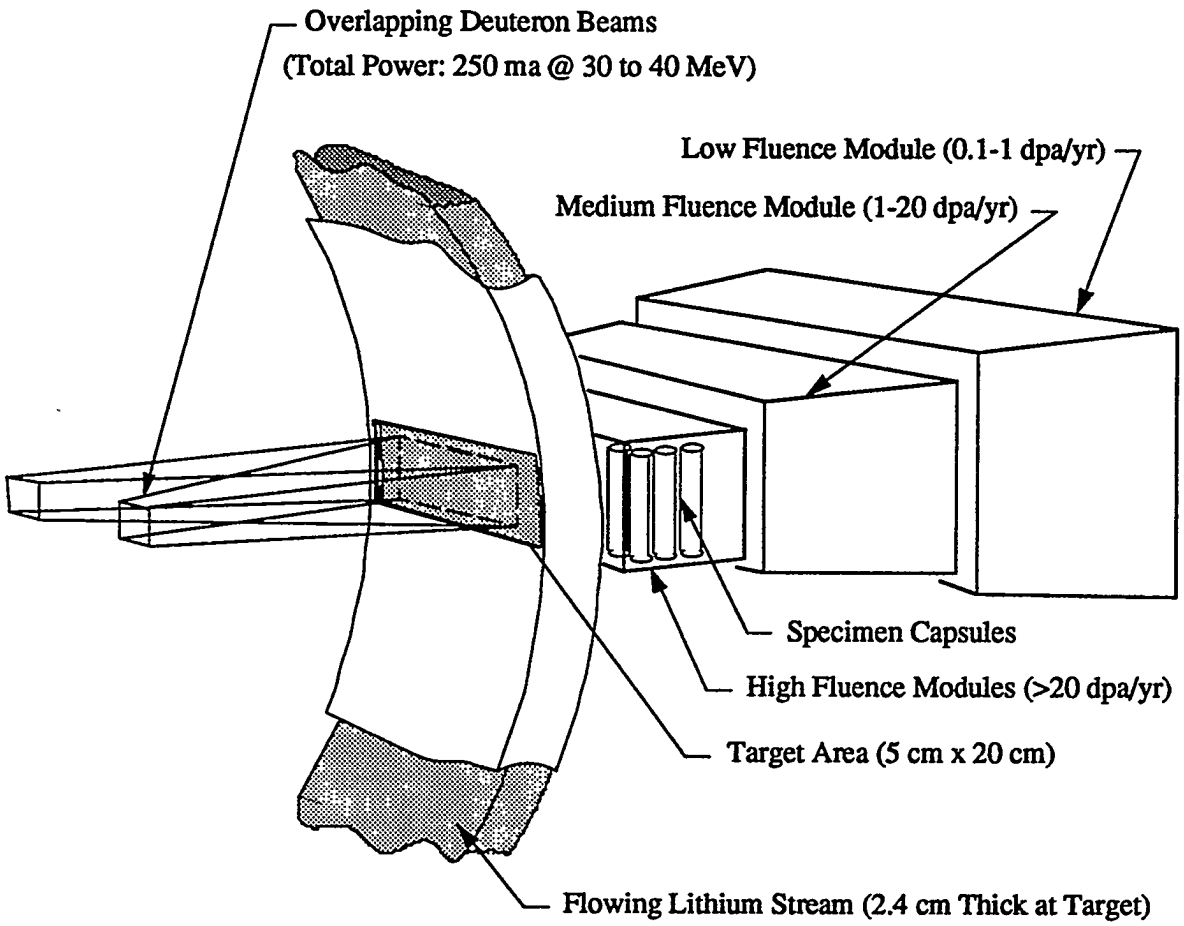

Fig. 2.1.1-2. Interface of IFMIF facilities in Test Cell.

2.1.1.1 Test Facilities

Test Facilities include two subsystems, the test assemblies and the post irradiation examination cells. The test assemblies are self-contained packages that position the material specimens in the neutron fluence and provide either NaK or He cooling to control the specimen temperature. The IFMIF Test Cell contains up to five test assemblies, which are removed and replaced with vertical access; thus, they are referred to as vertical test assemblies (VTAs). The VTAs are inserted in a Test Cell, usually for periods of roughly one year. At the end of an exposure campaign, all the specimens are removed and a small percentage of the total are evaluated in the PIE hot cells. The remaining specimens are repackaged along with new materials and cycled into the Test Cell for another campaign. A typical exposure life for different types of specimens will be on the order of ten cycles.

The operation-critical requirements of the Test Facility are confined to the test assembly, primarily the specimen cooling system. The technology for this system has been used in many fission test facilities and has been proven to be very reliable.

2.1.1.2 Target Facilities

The Target Facilities build on proven technology to provide a stream of lithium to the target zone. The lithium loop will contain systems for monitoring and maintaining the high purity of the loop ,as required for radiological safety, and for minimizing corrosion of the loop structure. The total lithium inventory is 12,600 L.

The most important element of the Target Facilities is the target assembly itself.. Based upon a thorough assessment of various target designs, the modified FMIT-type target with a replaceable backwall has been selected for the baseline design. In this arrangement, the front of the lithium stream is exposed to the accelerator atmosphere and the backwall is slightly curved to enhance flow stability. The backwall is a critical component; consequently, testing is required to verify the integrity of this element during the first two years of IFMIF operation.

2.1.1.3 Accelerator Facilities

The IFMIF requirement for 250 mA of deuteron beam current delivered to the target will be met by two 125-mA, 40-MeV accelerator modules operating in parallel. This technological approach is conservative with respect to the current capabilities of rf linac technology and provides operational redundancy by allowing operation to continue at 125-mA when one or the other of the two accelerators is temporarily removed from service for repair. Each 125-mA accelerator is designed with sufficient derating, but not with a significant upgrade capability. Additional beam current, if desired, would be provided by adding additional 125-mA modules.

2.1.1.4 Central Instrumentation and Control Systems

Control of the three process facilities will be performed using a conventional hierarchical control system. The primary control feature will be a group of special design sensors located in the Test Cell. These instruments will redundantly measure all the key operating parameters as close to the target as possible. Measurements that may be taken are:

- monitoring light from background gas scattering,
- flying-wire monitors at selected locations, and
- calorimetry.

2.1.2 IFMIF Facility Description and Expansion Option

The three process subsystems of IFMIF intersect in the two Test Cells. Consequently, each of these subsystems is physically oriented for optimum performance at these points. Thus, the layout of the IFMIF plant was considered with the target as the focal point.

Fig. 2.1.2-1 shows the overall plan view of IFMIF on the first floor as proposed for startup with two accelerators. The accelerator intersects the target horizontally from the left of the page, the lithium processing equipment cells are below to meet safety and performance requirements.

Fig. 2.1.2-2, a plan view of the second floor, shows the location of the PIE cells, equipment maintenance cells, offices, central control, operations management, data acquisition and the personnel access corridors. All are positioned for proximity to the Test Cell area.

Fig. 2.1.2-3 shows an elevation view of the main building sectioned in the HEBT and first Test Cell. Note the position of the lithium process facilities under the Test Cells. The hot cells for all functions are concentrated around the same area with the goal of localizing the tritium off-gas processing and reducing effluent gas piping requirements.

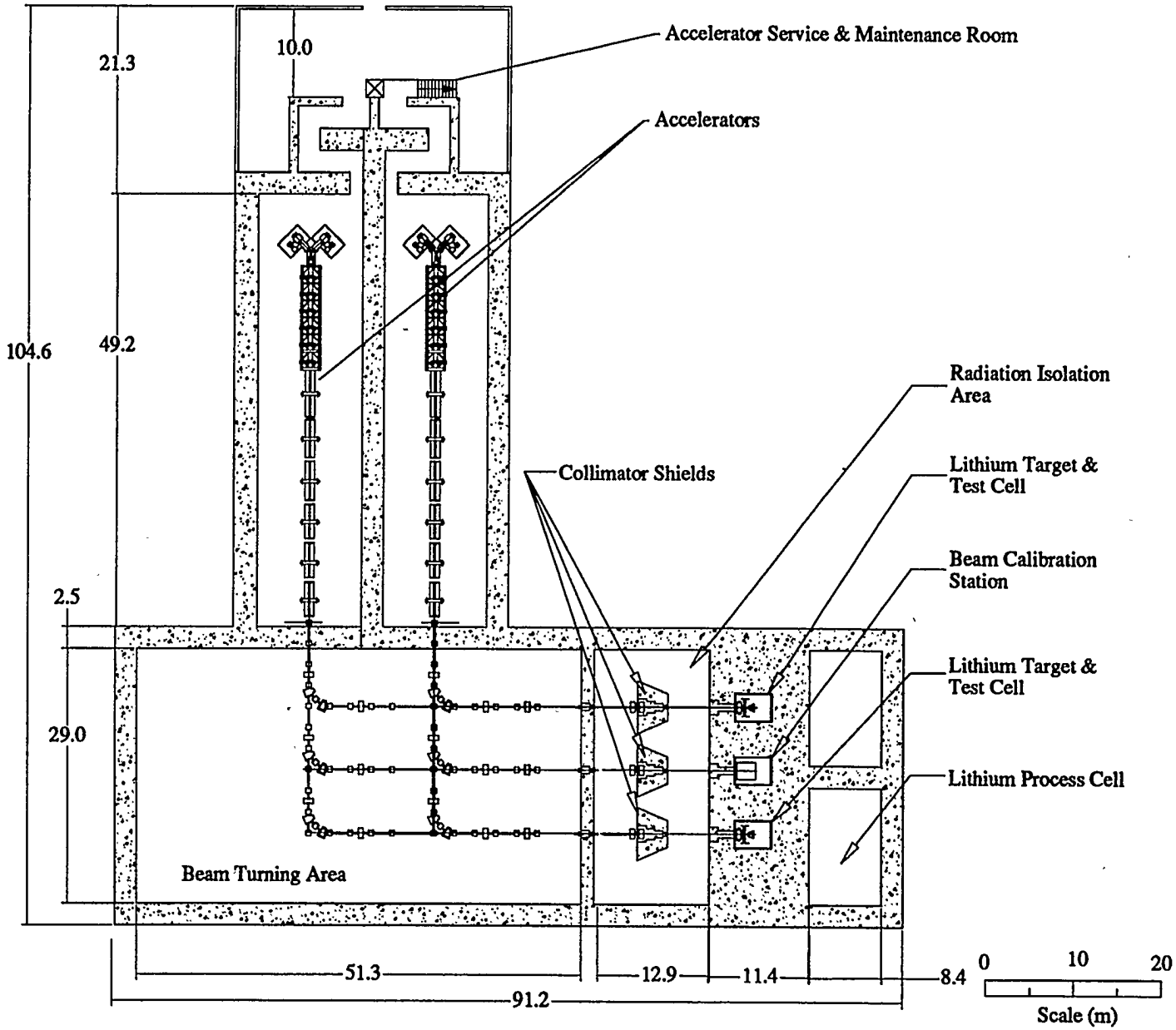

IFMIF Plant Layout
Plan View of First Floor
Figure 2.1.2-1

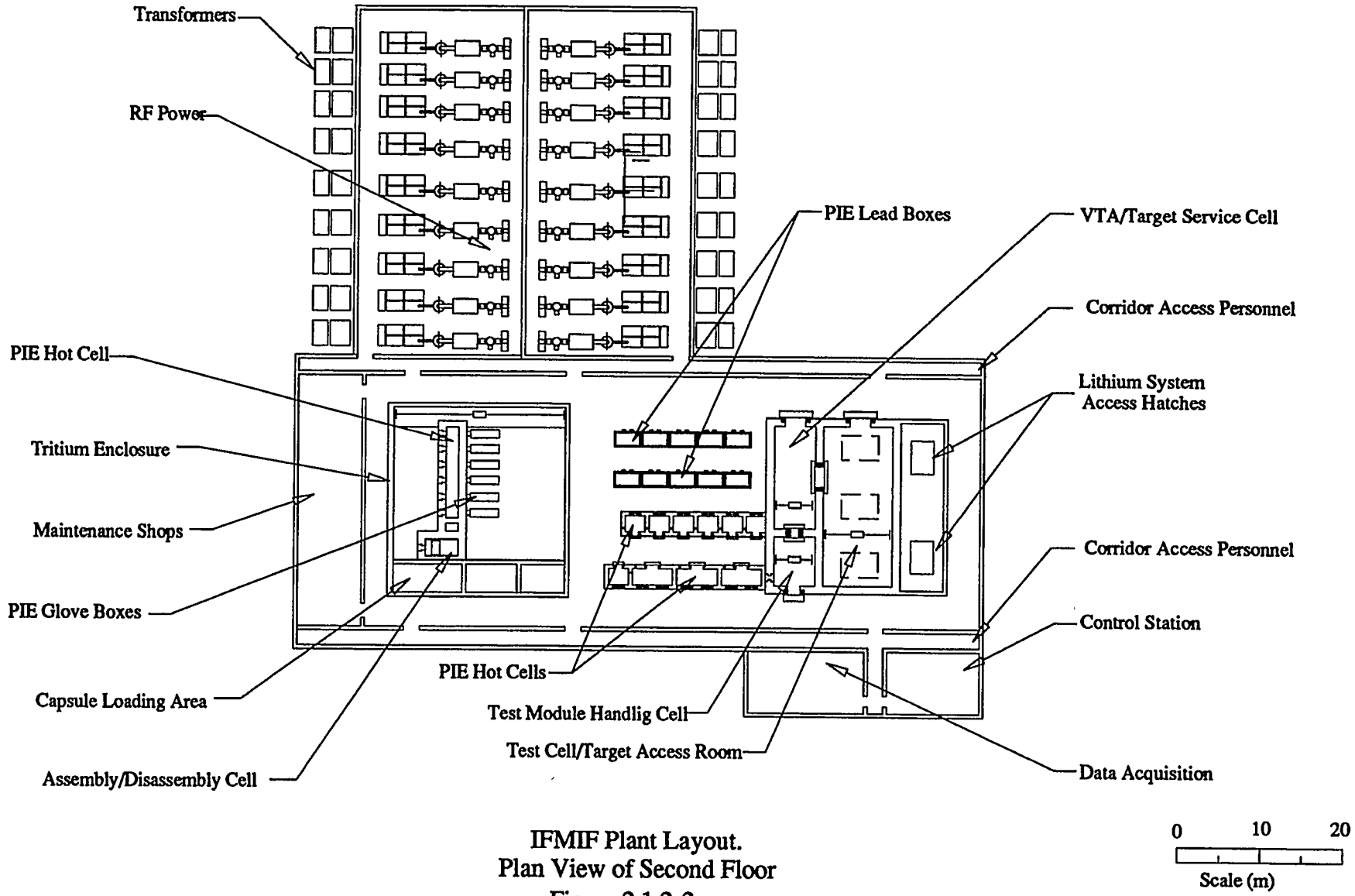

IFMIF Plant Layout.
Plan View of Second Floor
Figure 2.1.2-2

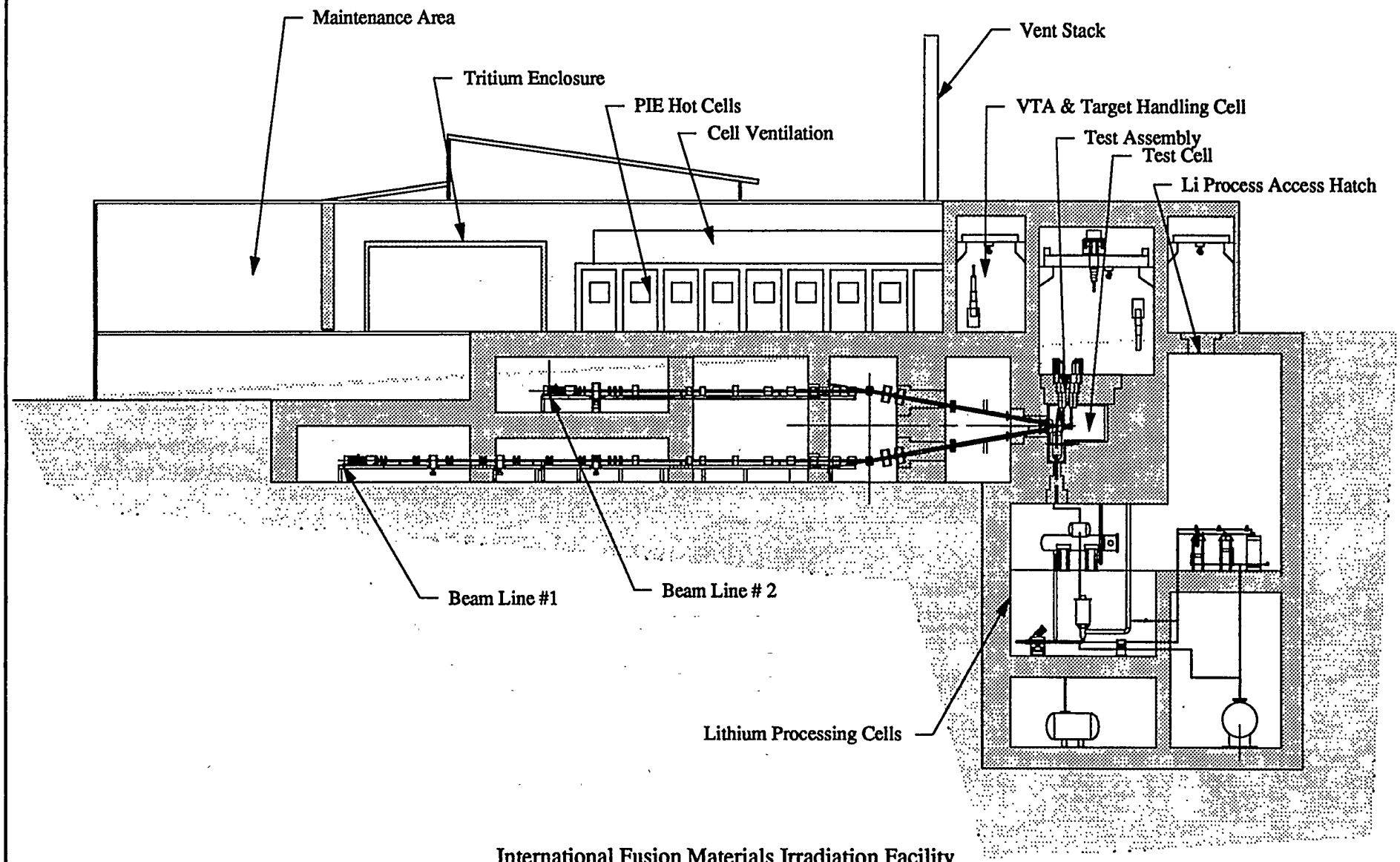

International Fusion Materials Irradiation Facility
Elevation Section
Through Center of Test Cell # 1
Figure 2.1.2-3

Because of the level of uncertainty in the amount of testing and development needed to characterize the damage effect of 14-MeV neutrons, the IFMIF facility has been designed from the outset to accommodate a possible future expansion in irradiation capacity and test volume as shown in Fig. 2.1.2-4. Two additional accelerators can be added so that two test assemblies could be irradiated simultaneously. The lithium system can be expanded so that both target systems can operate at the same time. At full power operation, this expansion would double the test volume for the displacement rates as shown above. If needed, this additional volume would allow much more flexibility in the range of operating conditions within the test assemblies and thereby significantly reduce the time to characterize and test new material options.

2.1.3 Personnel and Staffing

IFMIF is fundamentally an irradiated specimen production facility with very long time intervals between batches. Consequently, the number of personnel required to operate and maintain the plant is low relative to similarly sized, but higher rate, experimental facilities.

The estimated personnel roster is shown in Table 2.1.3-1. As the table shows, the total number of permanent employees is approximately 89, with 41 on the first shift, five days per week, and 14 to 17 on the remaining three shifts.

In addition to the permanent staff, space will be provided for 10 visiting researchers. In addition, two conference rooms will be included in the office space, one for 10 people and the other for 35 people.

The current personnel estimates assume that the IFMIF facility is sited near facilities that can provide reasonable security, medical, and emergency support.

Table 2.1.3-1. Personnel listing

	Shift 1	2	3	4	Total
Administration					
Plant manager	1	0	0	0	1
Office support	3	1	1	1	6
Visitor control	1	0	0	0	1
Operations					
Shift superintendent	1	1	1	1	4
Central control operators	3	3	3	3	12
Plant operators	4	4	4	4	16
Daytime staff	3	0	0	0	3
Plant protection	3	2	2	2	9
Safety officer	1	0	0	0	1
Hp technicians	3	1	1	1	6
Maintenance					
Maintenance manager	1	0	0	0	1
Shop labor	8	2	2	2	14
Accelerator shop labor	4	0	0	0	4
Experimental operations					
Hot cell operators	3	3	3	0	9
Data acquisition	2	0	0	0	2
Permanent staff	41	17	17	14	89
Users					
Visiting scientists	10	0	0	0	10
Facility requirements	51	17	17	14	99

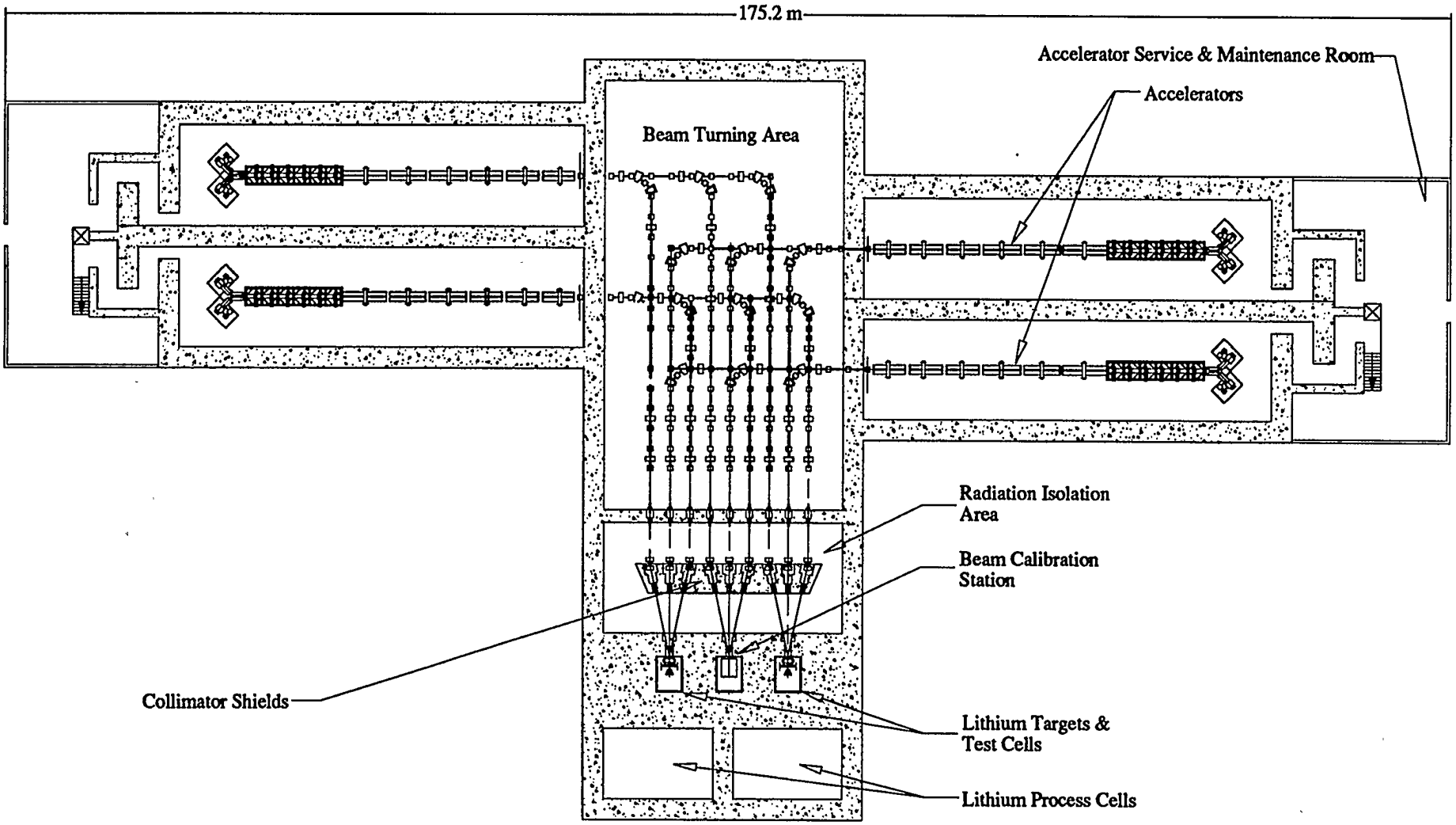

IFMIF Plant Layout.
Plan View of Expanded Configuration
Figure 2.1.2-4

0 10 20
Scale (m)

2.1.4 Overview of RAM

IFMIF is expected to perform as a neutron production facility. Consequently, continuous and highly reliable operation has been established as a basic design criterion. Specifically, the overall requirement for IFMIF is for an average of 70% on-line performance (6132 h) over a calendar year (8760 h).

Facility down-time will occur in two ways; unscheduled and scheduled maintenance. The balance between these two modes will be established during the early years of plant operation. However, for design purposes the following working assumptions have been made: scheduled maintenance will include the equivalent of one month off (31 d x 24 h = 744 h) once a year (or two periods of two weeks each, or a similar combination with the same total duration) and 8 h off once a week (52 weeks x 8 h = 416 h), leaving 7600 h for unscheduled operation. This means that the system availability (for unscheduled, random failures) design requirement is 6132 h/7600 h = 80.7 %. Based on this top level requirement, the availability has been allocated to the main IFMIF subsystems as follows:

- Test Facility: 97.5 %
- Target Facility: 95.0 %
- Accelerator Facility: 88.0 %
- Conventional Facil: 99.5 %
- Central I&C: 99.5 %

Total (Product): 80.7 %

Existing accelerator facilities, such as the ones at CEBAF, LAMPF and FERMI are operated in campaigns (runs) which last typically from several months to a year with major modifications and maintenance performed between the campaigns. During the campaign, the systems are operated without a regularly scheduled maintenance but, rather, according to a flexible maintenance scheme. This scheme is based on the objective to keep the system running, once started, for as long as possible. A list of current tolerable failures is continuously maintained and scheduled for repair during the next maintenance period that is forced by a failure that cannot be tolerated. Scheduling conflicts are resolved on the running basis by an expert team, including the "readiness coordinators" who are responsible for individual accelerator subsystems, and the experimenters. The maintenance program that results from this approach very likely (no formal proof or simulation is available to support this claim) results in higher availability, which is the reason why it is so universally followed.

Whether the IFMIF facility will eventually follow the same flexible approach, or the more rigid, fixed calendar, it is being assumed here that the total time devoted to scheduled maintenance is 1160 hrs out of a year. Therefore, the overall requirement of 80.7 % for unscheduled availability (or 19.3 % unavailability due to random, unscheduled failures) remains unchanged.

2.1.5 Overview of Safety

A uniform analysis of safety was applied to each major facility. The analysis used a standard failure modes and effects analysis (FMEA) format in which failures are identified and evaluated by considering three factors:

- ease of detection,
- frequency of occurrence, and
- risk potential.

This methodology is used to identify processes and elements that can then be considered in the design process. It is a continuing process that will be updated and reviewed in all phases of the IFMIF program.

The recommendations resulting from the initial safety analysis of each facility are given below. The detailed analysis is included in Subsection, 4 of each facility description.

2.1.5.1 Test Facilities

It is concluded that the IFMIF Test Facilities do not have significant potential hazards during operation. Failure modes in this subsystem have relatively less importance compared to target or accelerator. However, a safety analysis of a backwall rupture or a Li spill in the Test Cell vessel cannot be neglected. The incorporation of a vacuum environment in the Test Cell vessel has significantly improved the potential safety of the system in the event of backwall rupture.

It is suggested that an improvement of the design of the remote handling systems that has immediate impact for workers exposure should be emphasized.

2.1.5.2 Target Facilities

It is generally concluded that the IFMIF target system is technically feasible in the near future; however, some of the components,, and techniques require development activities to confirm that the facility is safe and effective.

Confinement and the potential hazards of radioactivity are the primary concern. In general, various technologies required for IFMIF are in the very early stage of development. Some, from the fast breeder reactor program, will be applicable, but the handling of tritium, vacuum, high-energy beam, and lithium are rather new. Failure and contamination effects that migrate from target to other subsystems are not considered here but seem important. Further analysis is recommended for all the target systems.

2.1.5.3 Accelerator Facilities

The most probable and severe accident originates from the prompt radiation caused by unpredictable beam losses and the resulting induced material activation. This causes the potential for personnel exposure during repair or maintenance operations. The criterion of the beam loss and its control are critical to manage this and other safety issues within the ALARA philosophy.

The important factor, human error, is not taken into account in the current accident scenarios. It may be properly assessed in the course of the fault tree analysis.

2.1.5.4 Conventional Facilities

Failures of the utility supply to IFMIF may cause serious safety problems in the entire facility. Interlocked actions are expected to be effective and important measures against such events. Standby and redundant systems may also be required. Each Facility group will consider the effects of these utility failures.

2.1.5.5 Central Instrumentation and Control Systems

Conventional, proven safety controls and monitors will be applied to the IFMIF control system. Several functioning facilities such as LAMPF, CEBAF and FERMI provide a solid basis on which to design this system.

2.1.6 Summary of Key Development Issues

The IFMIF conceptual design is based on the use of existing, proven technology to the maximum feasible extent. With this goal in mind, there is no requirement for basic research to implement any of the process or test systems.

Development activities have been planned to improve or adapt the technologies planned for IFMIF. In addition, a limited development effort is directed at alternative accelerator configurations, which may offer improved performance.

Some of the significant development activities planned for IFMIF are summarized below. Each is discussed in detail in Subsection 7 of each Facility description.

2.1.6.1 Test Facility Development

The only development program identified for the Test Facilities is fabrication and testing of a prototypical helium-cooled module and its thermal control system. This is required to verify that the precise fabrication for this system to operate properly can be reliably achieved. Further development efforts may be identified during later stages of the CDA.

2.1.6.2 Target Facility Development

Several lithium Target Facility development requirements are identified. They can be divided into two categories: (1) tasks for the target assembly and (2) lithium loop tasks requiring further development in the impurity monitoring and control areas. No development activities are anticipated for the main lithium loop.

Two elements of the Target Facility require additional development to improve on existing technology. The design of the target assembly will be confirmed initially in water tests and later with lithium. Candidate backwall materials will also be evaluated based on fission reactor data. Jet stability will be demonstrated under IFMIF conditions (without beam loading) during this program. Final acceptance of the target assembly will take place only during pre-op testing with full accelerator power.

Development of impurity traps, especially with the demonstration of an appropriate hot getter material for nitrogen and cold trapping of tritium, will be undertaken on a small lithium loop under IFMIF relevant conditions. In addition, regeneration of the D and T by yttrium gettering traps will be verified to address safety concerns resulting from the high tritium inventory.

Operation of a small lithium loop will develop and demonstrate acceptable calibration and operation of on-line monitoring systems. This test would incorporate technology and electronic instruments developed since FMIT (e.g., miniature quadrupole mass spectrometer) and confirm it for use in IFMIF.

2.1.6.3 Accelerator Facility Development

The IFMIF accelerator design is based on current technology but integrated systems operating at the required beam intensity and power levels have not been built and operated. A development program has been planned to provide verification of the engineering design; operations, RAM and safety parameters; and to obtain final design and cost information. The accelerator development program is based on early development of prototype components, which, if proven successful, will be incorporated into the IFMIF facility. In addition, the plan will improve the overall performance of IFMIF, reduce the technology risk by avoiding critical path decisions, and improve the cost performance by reducing duplication of final designs and prototype models.

Initially each of the component subsystems (injector, RFQ, DTL, and rf power) will be constructed and tested individually. As the subsystems are completed, combined testing will begin with a final test of the entire beam line at the IFMIF site. Ideally, the first beam line will be completely tested and approved prior to fabrication of the second beamline.

2.1.6.4 Beam/Target Instrumentation Development

Beam profile monitoring in the Test Cell is a difficult development task. Nonintercepting methods are needed for intense, cw beams. Candidates for profile monitors in the linac or HEBT include monitoring light from background gas scattering and flying-wire monitors at selected locations, with minimum-projection tomographic reconstruction. Beam-on-target profile monitoring should be accomplished by several different physical methods for safety redundancy.

2.1.6.5 Central Control Development

The control system required for IFMIF can be based on proven systems currently in operation in many experimental and production facilities; consequently, no additional development is required. For example, an existing system called EPICS is currently used at numerous national laboratories and in industrial installations to control complex scientific facilities. Implementation of this or a similar system will reduce both schedule risk and cost.

2.1.7 Summary Of Significant Alternatives

The IFMIF concept is based on proven technologies for which a limited amount of development is required for successful implementation. Alternative concepts are recommended for investigation where improved performance, lower cost, or better reliability may be achieved. Because of the advanced state-of-the-art of the IFMIF systems, few alternatives are recommended for evaluation.

2.1.7.1 Test Facility

The major alternative considered so far in the conceptual design of the Test Facility System is the high-flux module (VTA-1) coolant media. The two alternative coolants are gaseous helium or liquid metal (NaK). The present baseline incorporates both coolants. Helium is used for the high temperature specimen tests, i.e. tests above 600°C, whereas NaK is used for lower temperature tests.

Another alternative that has been proposed and may be considered in later stages of the conceptual design is the use of a more flexible test rig arrangement, whereby individual specimens or small packets of specimens can be removed or inserted without disturbing other test rigs, assemblies, or the test cell shield plug.

2.1.7.2 Target Facility

2.1.7.2.1 Target configuration

Three alternative target design options are under consideration:

1. a modified FMIT-type target with a replaceable backwall,
2. a scale-up version of the original FMIT target, and
3. a free jet target.

In principle, the first two options behave similarly; however, each design option imposes a specific Test Cell environment requirement (Sect. 2.5.1.4).

The advantages and disadvantages of each option are discussed in detail in Sect. 2.5. Although present data are insufficient for a firm final selection, the replaceable backwall target has been proposed for the baseline design because of its many advantages in simple remote handling/maintenance, high availability, and potential long target assembly lifetime. The FMIT and free jet targets are options, and along with the baseline target design will be tested during the first phase of IFMIF operation (see Sect. 2.1.6). At the conclusion of the development campaign, a final decision will be made to select a target design, that will meet the target lifetime goal of at least nine months, and other operating requirements.

2.1.7.2.2 Electromagnetic pump

The reference main electromagnetic pump design is a single annular linear induction pump (ALIP). An alternative to this is the straight-through design, which would require complete pump replacement in the event of pump failure. However, the advantage of the straight-through design is the much lower power requirement. In addition, a great deal of operating data at IFMIF relevant conditions (temperature and flow velocity) on a pump of similar design was obtained on the Experimental Lithium System.

2.1.7.3 Accelerator Facility

2.1.7.3.1 Ion Injector

There are two possibilities for the IFMIF deuterium ion source. The first is the Electron Cyclotron Resonance (ECR) source of the type operated successfully at Chalk River and Los Alamos. The second, an RF-driven, volume ion source of the type developed by Lawrence Berkeley Laboratory, also holds great promise for high current operation with high D^+ fraction and low emittance. The issue of rf window (ECR source) and antenna (rf source) lifetime is important and is currently being investigated at Los Alamos, Northrop Grumman and the University of Frankfurt. Although the ion source will be a critical element of the IFMIF system, the choice of rf or ECR source for this study will have very little impact on cost or facility requirements.

2.1.7.3.2 Superconducting (SC) 8-40 MeV accelerator.

Superconducting accelerator technology is of strong interest to this project and to other high-intensity particle beam applications of current interest. The technical and operational advantages of superconducting systems have already made it the technology of choice for many electron beam applications, and it may be the preferred technology for ion beam applications in the near future once a prototype test with full beam can be completed. However, to achieve cost parity, multiple superconducting cavities must be driven from a single large rf amplifier. Verification of this concept requires work to determine the technical feasibility and assess the operational flexibility of this approach.

2.1.7.3.3 525 MHz, 8-40 MeV Coupled-Cavity Drift Tube Linac

A new structure developed at LANL for protons, the Coupled-Cavity Drift Tube Linac (CCDTL) has a number of additional technical advantages, particularly a no-joint brazed construction that is desirable for long-life, factory-type operation. Beam handling required after the 8-MeV transition requires the length of the 8-40-MeV, 525 MHz CCDTL to equal that of the 8-40-MeV DTL, so the present layout configurations and costs for the two systems remain essentially the same. This option will be carried as a secondary option, in order to take advantage of proton machine development work and in case future development of beam funneling on other projects reopens consideration of this approach for cost reduction.

2.1.7.4 Central Instrumentation and Control

Advances in computing power and technology have led to corresponding improvements in industrial control systems. It is anticipated that during the planning and design phases of IFMIF, significant improvements in commercially available equipment will provide viable, and cost effective, alternatives to the Central Control System and the facility instrumentation.

2.2. User Requirements

2.2.1 Introduction

The need for a high intensity, high energy neutron source for the development of fusion reactor materials has been discussed and endorsed by many national meetings and several international panels, like the Blue Ribbon Panel in 1983 and the Amelinckx Panel in 1986. In this period it was not possible to reach a consensus on the type of neutron source which could have fulfilled most of the suitability and feasibility criteria. In a second round the International Energy Agency under the Implementing Agreement for a Programme of Research and Development on Fusion Materials started a further attempt with the IEA Workshop on Fusion Neutrons in San Diego 1989 [1], in which various high energetic neutron source concepts were discussed and where feasibility and suitability criteria were defined. At this meeting the technical requirements from the users point of view were described in more detail (Table 2.2.1-1). They consist essentially of a definition of the minimum volume necessary to do experiments for a given neutron wall loading, a requirement regarding the neutron flux gradient, a general demand that the neutron spectrum should meet a fusion spectrum as near as possible and several operational conditions. The technical feasibility of accelerator-based neutron sources was discussed in Tokyo in 1991 [2].

Table 2.2.1-1. Requirements for an intense neutron source (IEA-Workshop in San Diego 1989).

1. Neutron flux/volume relation: Equivalent to $2 MW/m^2$ in 10 L volume [$1 MW/m^2$, $4.5 \times 10^{17} n/m^2s$; E = 14 MeV, 3×10^{-7} dpa/s for Fe]

2. Neutron spectrum:
   Should meet FW neutron spectrum as near as possible;
   Quantitative criteria are:
   - Primary recoil spectrum, PKA,
   - Important transmutation reactions, He, H.

3. Neutron fluence accumulation: Demo-relevant fluences of 150 dpa dpa_{NRT} in few years

4. Neutron flux gradient: ≤10%/cm based on minimum dimensions of CT- and Charpy-V specimen

5. Machine availability: 70%

6. Time structure: Quasi continuous operation

$1 MWy/m^2 \approx 10 dpa_{NRT}$

One of the most critical questions for the selection of an appropriate neutron source for the materials community was and is the effect of the given neutron spectrum on important damage parameters, especially the high energetic tail of neutrons, which is typical for devices based on spallation- and stripping reactions. An IEA-Neutron Source Working Group, which was established in September 1990, evaluated for a number of important elements those physical damage parameters which are necessary to quantify the radiation characteristics [3,5]. Quantitative criteria are the displacement rate, the primary recoil spectrum and important gaseous and solid transmutations. One conclusion of this work was that the differences in damage parameters were not great enough to permit a selection of the different alternatives on the basis of this criterion alone.

At the IEA-Workshop in Karlsruhe in 1992 [4] the results of the Neutron Source Working Group were discussed and -taking into account that a selection based on the physical damage parameters alone was not possible - other criteria like the technical feasibility of the different concepts for the given time scale had to be considered. Under the assumption that such a neutron source should be available not much later than around the year 2000 the workshop concluded finally that a d-Li stripping source would be the best choice. The workshop also recognized ,however, that the originally specified volume of 10 L for high-flux irradiations with 2MW/m^2 and more had to be reduced by one order of magnitude, if a realistic beam-current of 250 mA is assumed for this alternative. This had as a consequence that in addition to the physical requirements set for such a facility, the test techniques with small specimen have to be developed and the relevance of the data generated by this Small Specimen Test Technology SSTT for design data is shown.

The IEA-Fusion Power Coordinating Committee accepted at meetings in 1993 and 1994 the technical conclusions of the Karlsruhe Workshop and the proposal of the IEA-Executive Committee to start a Conceptual Design Activity on an International Fusion Materials Irradiation Facility, IFMIF based on a d-Li stripping reaction.

The role which an IFMIF neutron source has to play for materials development and testing can be described by the following research areas:

1. Development of a variety of materials as described under Sect. 2.2.2 with emphasis on studies of materials radiation behavior and determination of design-relevant engineering data bases for a DEMO-relevant application.
2. Calibration and validation of data generated from fission reactor irradiations and other simulation experiments with light or heavy ions. This strategy is necessary because it is clear from the limited irradiation volume of IFMIF that both, the fission reactor irradiations as well as the irradiations with light and heavy ions have to be used in future to generate the bulk of irradiation tests.
3. Test of materials to be investigated in ITER.

2.2.2. Materials

The list of materials under consideration for fusion energy systems encompasses a broad range of metals and nonmetals. Much of the attention to date has necessarily focused on the structural materials for the blanket and first wall regions. The irradiation environment is particularly severe in these regions, and the technological and economic success of fusion as an energy source is critically dependent on finding a suitable low-activation structural material. However, a number of other materials must also function satisfactorily in high radiation fields in order for fusion energy to become commercially feasible. For example, the tritium fuel for the DT reaction must be produced and retrieved from the blanket region of the fusion reactor. In addition, ceramic insulators and optical materials are essential for the heating, control, and diagnostic measurement of the fusion plasma. Finally, the high magnetic fields that will contain the plasma will most likely be produced by superconducting magnets (either conventional or perhaps "high-temperature" superconductors). The following summarizes some of the candidate materials under consideration for different applications in fusion energy devices.

2.2.2.1 First wall and blanket structural materials

The key assumptions for the development of structural materials for the first wall and blanket structures are neutron wall loadings of 1-5 MW/m^2, an integrated wall loading of 10-20 MWy/m2 and a component lifetime of more than 10 years under quasi steady state conditions. The main fields of research regarding radiation damage are swelling - and creep phenomena, radiation hardening and embrittlement, fatigue- and creep interaction, fracture toughness and crack-growth as well as microstructural development, phase stability, segregation phenomena, effects of irradiation on stress corrosion and other topics.

At present in all material programs the three leading candidates for the first wall and blanket structure of DEMO are considered to be ferritic/martensitic steels, vanadium alloys, and eventually the SiC/SiC composites. All these materials are investigated in collaborative IEA programs. Two to three variants of each of these materials are expected to be investigated in IFMIF. Some space should also be reserved for a limited number of unspecified alternative materials ("innovative alloys"). It is unlikely that this specimen matrix can be significantly reduced, since IFMIF must meet the needs of more than one DEMO design.

A prototypic specimen loading matrix for the high flux (equivalent to >2 MW/m^2 first wall neutron loading) region of IFMIF was developed as part of the conceptual design activity for this facility (Users/Test Cell subgroup task CDA-D3). This specimen matrix includes recommendations developed in a previous evaluation performed in 1993 by the Neutron Source Working Group under Annex II of the Implementing Agreement for Research and Development on Fusion Reactor Materials for the International Energy Agency ("Test Volume Considerations for an IFMIF", D.G. Doran, et al, [6]).

Table 2.2.2-1 lists a possible test matrix of the materials, irradiation temperatures and doses (in dpa) for the high flux region of IFMIF. A total of 6 or more irradiation temperatures ranging from 250 to 1000°C are considered to be of interest for evaluating the radiation resistance of first wall (including divertor and limiter) and blanket structural materials From a technical point of view the irradiation of three different material groups which have different ranges of operating temperatures leads to separate specimen chambers.

Table 2.2.2-1. A possible test matrix for first wall and blanket structural materials in the high-flux region of IFMIF.

Materials	Dose (dpa)	Temp. (°C)
FM1, FM2, FM3*, I1, I2*	20-150	300
FM1, FM2, FM3*, Van 1, Van 2, Van 3*, I1, I2*, SiC1	20-150	400
FM1, FM2, FM3*, Van 1, Van 2, Van 3*, I1, I2*	20-150	500
Van 1, Van 2, Van 3*, SiC1, SiC2, I3	20-150	600
SiC1, SiC2, I3	20-150	800
SiC1, SiC2, I3	20-150	1000

Material Identification	Description	# of heats
FM1, FM2, FM3*	Ferritic/ martensitic steel	3
Van1, Van2, Van3*	Vanadium alloys	3
SiC1, SiC2	SiC/SiC composites	2
I1, I2*, I3	Innovative alloys	4
	Total	12

* TEM and tensile specimens only

2.2.2.2. Breeding materials (ceramic breeders)

The primary functions of a fusion reactor breeding blanket are: 1) production and transport of tritium for fuel processing, 2) heat generation and removal for power-producing energy conversion, 3) neutron shielding for components outside of blanket region. Such functions are provided by breeding materials which include Li to produce tritium via nuclear reactions with neutrons. Two types of breeders, i.e., ceramic breeders (Li ceramics) and liquid breeders (Li, Li-Pb) are proposed for breeding blankets. Ceramic breeders have in comparison with liquid breeder materials excellent materials properties in tritium recovery, safety etc. However, the ceramic breeders are subjected to radiation damage in fusion blanket environments. Consequently, irradiation tests are indispensable to evaluate degradation of the materials properties relating to the functions of blankets, i.e., tritium release performance under irradiation, irradiation durability, thermal properties, compatibility with structural materials, etc.

Ceramic breeders are lithium-based ceramics such as Li_2O, Li_4SiO_4, Li_2ZrO_3, $LiAlO_2$ which are candidate materials for ceramic breeder blanket in ITER. Materials properties and irradiation behavior of these ceramic breeders have been investigated so far in various laboratory experiments and in irradiation tests using fission reactor irradiations. Especially for Li_2O and Li_2ZrO_3, the irradiation behavior was investigated by IEA collaborative in-situ tritium release fast neutron irradiation tests (BEATRIX-II), which could simulate neutronic environments in fusion breeding blanket except the high energy neutron spectra exceeding several MeV. In the BEATRIX-II irradiation tests, good tritium recovery performance and irradiation durability of Li_2O and Li_2ZrO_3 were demonstrated up to a high burnup level (5% Li burnup) corresponding to the most severe condition of ITER breeding blankets.

Recently, some materials properties and tritium release behavior of Li_2TiO_3 were measured and from the experimental results Li_2TiO_3 is also expected to be one of the candidates of ceramic breeders for fusion breeder blankets. Candidates of ceramic breeders for DEMO fusion reactors will be the above-mentioned lithium based ceramics or materials which will further be optimized. Thus, ceramic breeders expected to be tested in IFMIF are Li_2O, Li_2ZrO_3 $LiAlO_2$,Li_4SiO_4, Li_2TiO_3 and some innovative lithium-based ceramics.

2.2.2.3 Special purpose materials

Many ceramics will be used in fusion reactors as materials for electrical insulation of in-vessel components and vacuum vessel, rf windows, diagnostics, etc. For these materials, good functional properties such as high electrical resistivity, low dielectric loss, adequate thermal conductivity, and good optical properties are required in the fusion reactor environment as well as high irradiation durability. In some cases, several materials are combined in unique geometries (e.g., magnetic coils used to detect the location of the plasma). In-situ irradiation tests on these specialized components are needed to assess their stability in a radiation environment.

Another category of materials that may need some additional irradiation testing is cryogenic materials, e.g., superconducting magnets, polymer insulation, and windows for electron cyclotron heating systems. Finally, although the primary mission for IFMIF is evaluation of irradiated materials for fusion energy applications, some consideration should also be given during the design for other potential users (basic science programs, accelerator-based spallation neutron sources, etc.).

2.2.3. Types of experiments

2.2.3.1. Instrumented capsules for PIE

For the majority of experiments with structural materials the irradiation in the high-flux region followed by a post-irradiation investigation is the normal procedure. Individual samples have to be encapsulated to avoid possible contamination from the test cell coolant. For sample packages the dimensions have to be chosen such that the maximum temperature difference between the specimen and the package wall is less than 10°C. The irradiation campaigns are conducted in 10 to 20 dpa segments in the high-flux region and the test assemblies are replaced during the planned out-cycles of the irradiation facility. A special emphasis has to be given to the correct temperature control and the monitoring of the neutron flux and dose. As known from reactor irradiations and other irradiation experiments temperature variations can have strong effects on the development of radiation-induced defects and hence on properties. Therefore, a special requirement is the control of temperature under beam variations or interruptions.

2.2.3.2. In-situ experiments

In-situ tests are required to establish the design data base of materials and in some cases mandatory for measuring the materials data properly. However, since in the high flux region of IFMIF the instrumentation of in-situ experiments would be too volume-consuming , only a few in-situ tests are in planning for structural materials (e.g., creep/fatigue tests and IASCC tests). For other materials, in particular ceramic breeding materials, ceramic insulators, rf windows and feedthroughs, and diagnostic materials (fiberoptic cables, windows, magnetic coils, etc.) in-situ tests are mandatory. A summary of necessary in-situ tests that are currently foreseen is given below.

2.2.3.2.1. Structural materials

- Creep/fatigue tests: In-situ creep- and fatigue tests have clearly indicated that the simultaneous irradiation and mechanical loading cannot be simulated by conventional post-irradiation tests. Results have shown that the conventional PIE overestimate the effect of irradiation on the lifetime of components and hence are too conservative. This finding can be rationalized, since in post-irradiation tests the radiation hardening is stronger than under in-situ conditions where annealing of defects can occur under irradiation. A further need for in-situ studies is in the field of irradiation affected stress-corrosion phenomena (IASCC) .Therefore, the development of special test devices for in-situ testing is mandatory for the study of these phenomena.

2.2.3.2.2. Ceramic breeders

Most of the fusion blanket designs utilize continuous tritium recovery during operation. There are some concerns about degradation of tritium release performance under irradiation, mechanical integrity and thermal properties, etc. due to irradiation. In-situ tritium recovery experiments up to the expected lifetime, which are followed by PIE to evaluate irradiation durability, are very important for materials development for DEMO fusion reactors and the fusion breeding blanket designs using ceramic breeders. Moisture (HTO or H_2O) has a large influence on the irradiation behavior of ceramic breeders, especially for Li_2O as well as materials properties. Therefore, the atmosphere during irradiation tests has to be controlled even for the irradiation durability tests by using sweep gas. Thus, all irradiation tests for both, in-situ tritium recovery tests and PIE to evaluate irradiation durability, thermal properties and compatibility etc. should be carried out in in-situ experiments in which moisture level in the atmosphere and temperature of specimens are controlled with sweep gas and temperature control system (e.g., gap gas control, etc.). The specimens irradiated in the in-situ experiments are required to be investigated with the PIE shown in Table 2.2.3-1 in order to evaluate the irradiation durability, degradation of thermal properties, tritium inventory, etc.

Table 2.2.3-1 . PIE tests for ceramic breeder specimens

Properties	PIE Items
Dose Level	Li burnup (Li Isotope Ratio)
Tritium Inventory	Tritium retention
Durability	Mechanical Integrity
	Dimensional Change
	Density Change
	Fracture Strength
	Helium Retention
Microstructural Change	Optical Microscopy
	Scanning Electron Microscopy
Thermal Property	Thermal Diffusivity
Compatibility	Reaction Depth
	Analysis of Reaction Products
Radiation Damage	Transmission Electron Microscopy
	FT-IR Spectroscopy
	Raman Spectroscopy, etc.

2.2.3.2.3. Ceramic insulators

Radiation Induced Conductivity (RIC) occurs in ceramic insulators during irradiation and disappears after irradiation. Some recent work also suggests that a very large permanent decrease of the electrical resistivity, known as "Radiation Induced Electrical Degradation (RIED)", can occur if the ceramic insulator is irradiated with an applied electric field. Although the RIED can be detected after irradiation, an electric field must be continuously applied to the specimens during irradiation in order to induce the effect. Furthermore, in order to obtain useful data about the dose dependence of this phenomenon, in-situ monitoring of the electrical resistance is needed. Thus, in-situ experiments for electrical resistivity of insulator ceramics are necessary to investigate RIC and RIED.

In-situ experiments for dielectric loss of insulator ceramics are also useful, since dielectric loss can increase due to RIC and RIED and there is only limited available data on the dose dependence of the dielectric properties of ceramics irradiated at different temperatures. In addition, there is some possibility that point defect annealing may occur in the irradiated ceramics during room temperature storage (as the specimens are disassembled in the hot cells, etc.). This would result in the erroneous measurement of a lower amount of dielectric loss than was present at the end of the irradiation. In-situ measurement of the thermal conductivity of ceramic insulators would also be of interest due to similar concerns about the possibility of post-irradiation annealing of point defect damage. A satisfactory alternative to in-situ measurement of dielectric properties and thermal conductivity would be a cryogenic transfer system which would allow irradiated specimens to be rapidly transported out of the test cell to a cryogenic storage facility where they would be kept until they were ready to be tested (thereby preventing point defect annealing).

Luminescence due to irradiation of optical fiber or window materials can be measured only during irradiation. On the other hand, optical absorption of radiation damage can be detected after irradiation. However, optical absorption will occur at low dose. Consequently, in-situ experiments for optical properties of optical diagnostic materials are needed for the same reason as in the case of the electrical properties mentioned above.

A final category of in-situ tests involves irradiation of mockup components (e.g., magnetic coils connected to long pulse integrators). It is obvious that the low- and very-low-flux regions of the test cell need to be flexible to accommodate the wide variety of geometries expected for these mockup tests of components, and additional unforeseen in-situ experiments.

2.2.3.2.4. Cryogenic in-situ irradiations

Due to an anticipated lack of available cryogenic irradiation facilities in the upcoming decade, it would be very useful to dedicate a large portion of the very-low flux region of IFMIF for irradiation of materials at temperatures between ~4 K and ~200 K. This flexible cryogenic irradiation facility would be used to investigate the irradiated behavior of superconducting magnet materials, polymer insulation, etc. It is anticipated that in-situ tests of the physical properties of various superconducting materials (conventional and "high-temperature") could be performed, along with additional tests such as the magneto-resistivity of the stabilizer material (usually copper or aluminum). The capability of cryogenic transfers of irradiated materials to the post-irradiation examination facilities is also considered to be an indispensable feature.

Irradiation of candidate window materials for electron cyclotron heating (ECH) systems would also be performed in this facility. It would not be necessary to perform in-situ measurements of the dielectric properties of the ECH insulators (only need the cryotransfer system, in order to prevent point defect annealing).

2.2.4. Small specimen test technology

Extensive use of miniaturized specimens is essential in order to fully utilize the available irradiation volume of IFMIF. Miniaturized specimens are particularly important for the 0.5 L high-flux irradiation region of IFMIF in order to maximize the amount of engineering data obtained at high damage levels. However, utilization of small specimens also is advantageous in the medium, low and very-low flux regions of IFMIF. Numerous miniaturized specimens are already commonly used by the fusion materials community, due to the limited irradiation volumes available in most fission test reactors. For example, most water cooled fission test reactors have high-flux irradiation channels with a typical diameter of 1 to 2 cm. Extensive studies have been performed over the last 15 years by materials scientists to validate what amount of specimen miniaturization is acceptable for various mechanical property tests, i.e., what are the minimum specimen sizes that give bulk mechanical properties. Further refinements in the small specimen technology are expected to occur over the next few years.

The tentative reference specimen geometries for the first wall and blanket structural materials are shown in Fig. 2.2.4-1. It is anticipated that seven different specimen geometries will be used for investigation of key properties such as density and microstructure, tensile properties, fatigue strength, fracture toughness, crack growth, impact behavior, and irradiation creep. It is anticipated that further development will be required on several of the specimen geometries to verify their suitability for providing engineering design data. In particular, the miniature SF-1 push-pull fatigue specimen is still under development at JAERI and has not yet been tested. However, it is anticipated that the miniature SF-1 fatigue specimens would at least provide qualitative information that could be used to compare the fatigue behavior of the various candidate materials and could be correlated with fission reactor irradiations. Larger push-pull cylindrical fatigue specimens could be irradiated at later times (e.g., 10-15 years after the start of facility operation) on one or two materials that show the most promising overall radiation resistance behavior. A special geometric requirement is valid for the SiC/SiC-composites. Since accurate mechanical property tests of such composites require a minimum specimen thickness of about ten times the distance between the woven layers of fibers -which corresponds to roughly 3 mm - tensile data for SiC/SiC composites would most likely be obtained from bar shaped specimen. Sheet tensile specimen with twice the thickness mentioned in Fig. 2.2.4-1 could be used to provide at least qualitative strength data for this material.

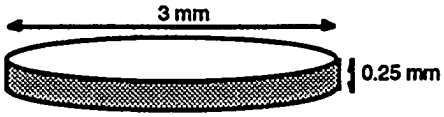

a) Microstructure (TEM disk)

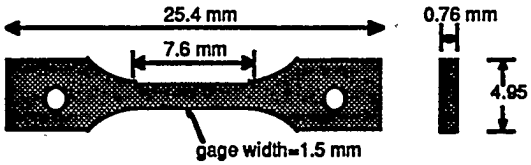

b) Tensile properties

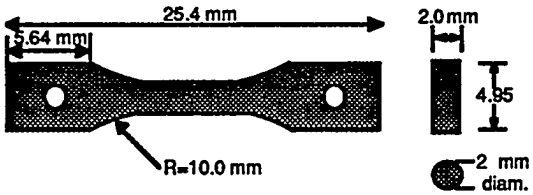

c) Push-pull fatigue

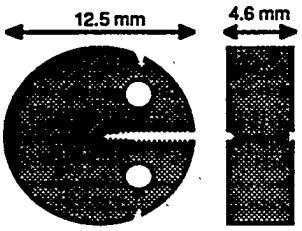

d) Fracture toughness,

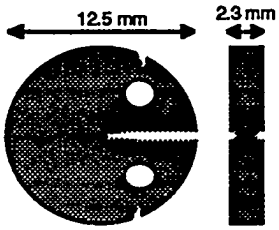

e) Fatigue crack growth

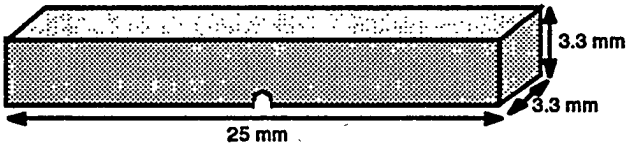

f) Dynamic/static fracture toughness

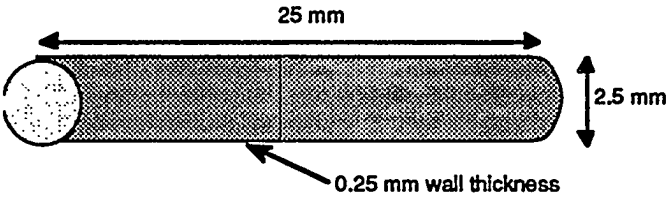

g) Pressurized creep tube

Fig. 2.2.4-1. Summary of proposed specimen geometries for mechanical and physical property tests on specimens irradiated in the high flux region of IFMIF.

For ceramic breeding materials, the tritium inventory and irradiation durability characteristics, i.e., swelling, microstructure, bulk density etc. after irradiation depend on the temperature and temperature gradient. Temperature gradients in ceramic breeders are strongly dependent on specimen shape. In breeding blanket designs for DEMO fusion reactors using ceramic breeders, blocks, pebble bed and tubes of ceramic breeders are used. Therefore, the following four types of specimens of various ceramic breeders shown in Fig. 2.2.4-2 will be tested with IFMIF: a) Disks (10 mm in diameter x 2 mm in thickness) for which the temperature gradient is small and irradiation behavior at various temperatures can be examined, b) Pellets (10 mm in diameter x 10 mm in length) for which temperature gradient is large, c) Pebbles (1 mm in diameter) for which irradiation behavior of pebble bed concepts can be tested, d) Compatibility test specimens (Breeder; 5 mm in diameter x 1.5 mm in thickness, Structural materials; 5 mm in diameter x 0.5 mm in thickness) for which compatibility with structural materials during irradiation can be examined. (see section 2.2.5)

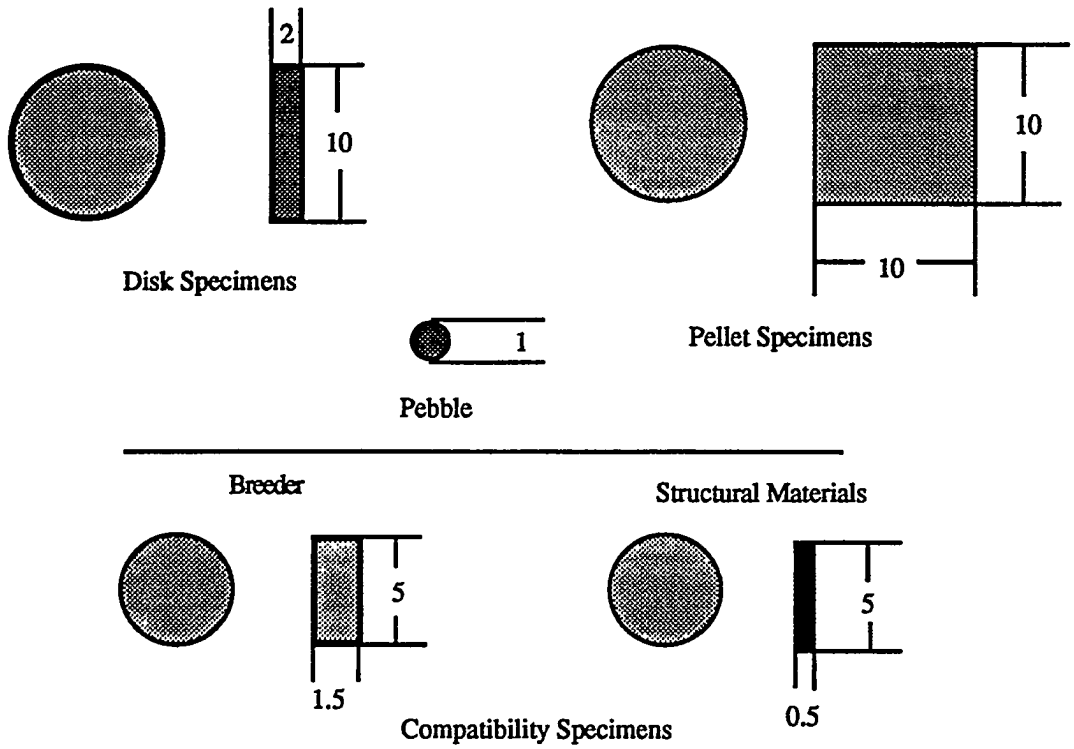

Fig. 2.2.4-2. Various types of ceramic breeder specimens.

2.2.5. Irradiation Conditions

2.2.5.1. Flux-volume and flux-gradient requirements

According to the programmatic requirements mentioned in Sections 2.2.2 and 2.2.3 the irradiation parameters for the different material groups vary substantially. They are summarized in Table 2.2.5-1. Accordingly the whole test volume of IFMIF has been partitioned in a high-flux region with at least 20 dpa/ y , a medium flux zone, a low flux area where fluence levels up to 1 dpa/year can be accumulated and a zone with very low flux, in which the yearly accumulated fluence will range between 0,01 and 0,1 dpa. The partitioning of irradiation volume is indicated in Fig. 2.2.5-1 The test cell will consist of several vertical test assemblies (VTA´s), more detailed described in Sect. 2.4 .

Table 2.2.5-1. Irradiation parameters for the different materials to be tested in IFMIF.

High flux regime:

- Investigated materials
  First wall and blanket structural materials

  Material/Irradiations:

Ferritic-martensitic steels:	250 - 500°C,150 dpa
Vanadium alloys:	250 - 600°C, 150 dpa
SiC/SiC-composites:	400 - 1000°C, 150 dpa

- Type of experiments:
  - Mainly instrumented irradiation capsules for post-irradiation tests
  -In a later stage few fully instrumented in-situ tests on creep-fatigue and IASCC

Medium and low flux regimes:

- A variety of different materials has to be tested under different irradiation conditions:

  Material/Irradiations

Ceramic insulator materials:	RT - 500°C, 0.1 - 10 dpa
RF-windows:	RT - 400°C, 0.1 - 10 dpa
Diagnostic materials:	RT - 400°C, 0.001 - 1 dpa
Ceramic breeder materials:	300 - 700°C, 1 - 50 dpa
Superconducting materials:	4 - 100°K, < 0.1 dpa
Structural materials:	specific investigations like low dose effects

- Fully instrumented in-situ tests under irradiation:
  - Fatigue- and crack growth tests
  - Stress-corrosion tests IASSC
  - Radiation induced conductivity and electrical degradation RIC, RIED
  - T-diffusion and release measurements

After the Karlsruhe meeting 1992 the formerly fixed requirements of 10 L for a neutron wall loading of 2MW/m2 and more had to be revised as already mentioned. This was based on more accurate calculations made in different laboratories regarding the neutron-flux distributions. According to these calculations an irradiation volume of about 0,5 L for a neutron wall loading of 2 MW/m^2 and more for a given beam footprint (5x20 cm), a reference deuteron energy of 35 MeV and a two beam configuration with a total of 250 mA is realistic. The neutronics calculations also have included different loading ratios with different materials and cooling media [7,8]. In Table 2.2.5-2 the results of displacement damage calculations in different first wall spectra of ITER and DEMO are summarized for an integral wall loading of 2 MW/m^2 and for several materials. They are based on neutron spectra, provided by 3d Monte Carlo calculations. These dpa-values can be obtained in the high-flux region of IFMIF.

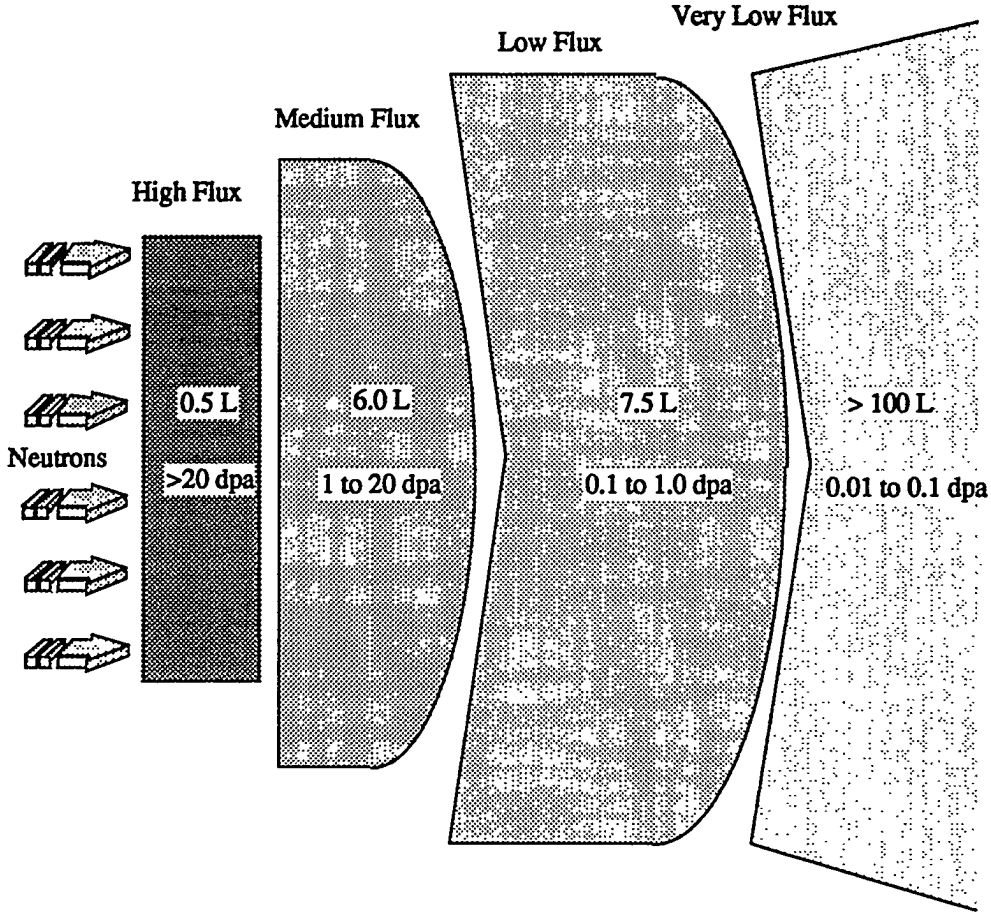

Fig. 2.2.5-1. Test Cell Configuration

Table 2.2.5-2. Displacement damage of different materials in a first wall spectrum of ITER and DEMO (Fischer 1995) [8].

2.0 MWy/m2	ITER inboard mid-plane	DEMO outboard mid-plane
SS-316 steel	20.3	17.5
MANET steel	20.2	17.3
V15Cr5Ti	20.9	18.9
Al2O3	18.8	17.6
Li4SiO4	9.4	5.7
BeO	11.1	10.8

This irradiation volume is comparable to (or slightly smaller than) the typical irradiation volumes available in existing fission neutron reactors, e.g., ~0.6 L for the Removable Beryllium positions in the HFIR reactor. It is therefore clear that extensive use of miniaturized specimens will be required for the IFMIF tests, and that only a limited number of materials can be tested. Recent test volume considerations have shown that the given test matrix for structural materials can be performed by using special loading strategies (See 2.2.5.6) and miniaturized specimen mentioned above. In Table 2.2.5-3 and 2.2.5-4 typical examples for a specimen matrix of one material in one pretreatment condition and the

corresponding volume requirements of specimens and specimen packets is given. The establishment of an irradiated properties data base for DEMO will certainly require extensive use of both IFMIF and fission reactor irradiation sources. It is assumed that fission reactor facilities will continue to be available to perform scoping irradiation tests on experimental or innovative alloys, and that IFMIF will only be used to test materials that have demonstrated good radiation resistance during high-dose (>50 dpa) fission neutron irradiation.

Considering the possibility of future upgrades in the performance of IFMIF, higher fluxes with a similar or slightly larger irradiation volume would clearly be useful in order to decrease the ≥20 years required to perform lifetime (~150 dpa) irradiation tests on the three leading candidates for the DEMO structure (ferritic/martensitic steels, vanadium alloys and SiC/SiC composites). On the other hand, reconfiguration of IFMIF to produce higher fluxes with an irradiation volume significantly smaller than ~0.5 L is not considered to be an attractive option due to minimum volume requirements for key property tests such as irradiation creep, fracture toughness and crack growth (this information cannot be obtained from miniature TEM or tensile specimens). Further analysis is required to determine the minimum acceptable volume for accelerated irradiation tests.

The anticipated maximum dose for organic insulation, superconductors, and ECRH windows in fusion energy devices is ~0.001 dpa; this implies that irradiation fluxes as low as ~0.01 dpa/FPY (0.001 dpa/month) might be useful for performing lifetime irradiation tests on these components.

The requirements for gradients of neutron flux in the different test zones are somewhat different. For metallic materials where for some material properties a high flux dependence is known (e.g. the fracture toughness in the low fluence range) flux gradients of less than 10%/cm are needed. Similar conditions have to be fulfilled in the medium- and low-flux regimes for the irradiation of ceramic breeder materials, insulators and other ceramic materials. Flux gradients are less important for the studies of typical high-fluence effects, where larger gradients could be accepted .

Table 2.2.5-3. Summary of possible high-flux specimen matrix for one material condition.

Property	Multiplicity @ ea. irrad. condition	Vol. occupied (cm^3)	% of total volume
Microstructure/ swelling	≥5	0.025	0.2%
Tensile	4-6	1.2	10%
Fatigue	4	2.3	18%
Fracture toughness	3	4.0	32%
Crack growth	2	1.6	13%
Bend bar/ dynamic fracture toughness	≥4	2.0	16%
Creep	≥4	1.4	11%
			Total: 12.5 cm^3

*includes space occupied by specimen container

Table 2.2.5-4 Volumes of specimens and specimen packets

Properties	Geometry (dimensions in mm)	Specimen Vol. (cm^3)	Packet Configuration* (cm) [area, cm^2]	Specimens /Packet	Packet Vol.** (cm^3)
Microstructure	TEM disk (3 dia. x 0.25 t)	0.0018	0.4 dia x 2.5 [1.00]	≤80	0.4
Tensile	SS-3 (25 x 4.8x 0.76)	0.091	0.55 x 0.7 x 3.0 [2.10]	4	1.16
Fatigue	SF-1 hourglass (25 x 4.8 x 1.52)	0.18	0.55 x 0.7 x 3.0 [2.10]	2	1.16
Fracture toughness	0.18 DCT (12.5 dia. x 4.6 t)	0.57	0.6 x 1.5 x 3.0 [1.80]	2	2.7
Crack Growth	0.09 DCT (12.5 dia. x 2.3 t)	0.28	0.7 x 1.5 x 3.0 [2.10]	4	3.15
Bend/Charpy/DFT	1/3-Charpy (3.3 x 3.3 x 25)	0.28	0.9 x1.2 x 2.85 [2.56]	6	3.08
Creep	0.7-Pressurized Tube (25 x 2.5 dia.)	0.13	0.4 dia x 2.85 [1.14]	1	0.36

* Dimensions were determined according to standard packing arrangements used for fission neutron irradiation capsules (see accompanying text)

** Includes space occupied by the specimen container

2.2.5.2 PKA spectrum requirements

The primary recoil spectra , i.e. the spectra of recoil energies of primary knocked-on atoms (PKA) determine not only the energy for elastic collisions, but also the partitioning of freely migrating defects and defect clusters. Therefore , for a given material which will be used in a specific component in a fusion device the irradiation position in IFMIF should be selected in such a way that the PKA spectrum in the IFMIF environment is as near as possible to that in the fusion reactor. Work by the IEA Neutron Source Working group has shown that for the high-flux region in IFMIF the PKA spectra agree rather well with the DEMO-First wall position for nearly all elements with some deviations for carbon. There is, however, an uncertainty of these calculations due to the lack of neutron cross sections for energies above 20 MeV. For the other test areas such calculations have not yet been performed, but are urgently required.
Experiments performed at low doses show in a number of materials at low temperatures, where the vacancy mobility is small, similar results in terms of microstructure and mechanical properties after irradiation in neutron sources with different PKA spectra. At higher temperatures, where defect agglomeration occurs, differences have been observed in the swelling behavior after fission reactor and 14 MeV neutron irradiations.
In general, calculations have shown that the main difference in recoil energy between 14 and 20 MeV neutrons is in the PKA-range of 2-3 MeV. Since they constitute only a small part of the whole recoil spectrum they can eventually be neglected. This point has ,however, to be further investigated, when a variation of the deuteron energy from 35 to 40 MeV is foreseen.

2.2.5.3 Transmutation requirements

The production of light elements like hydrogen and helium, which are known to be nonsoluble in solid structural materials, and hence often lead to specific phenomena of embrittlement, has to be quantified as much as possible in order to adapt the irradiation conditions in IFMIF as much as possible to the conditions in a future fusion device. So far calculations have concentrated for important elements on damage and transmutation productions in ITER and for a selected DEMO-spectrum summarized in Table 2.2.5-5 [8]. The data show the strong effect of the neutron spectrum on dpa- and transmutation reactions and also the specific dependence on the investigated elements. The very important question to what extent such transmutation rates can be simulated by the irradiations in IFMIF and how a variation of deuteron energy can influence these data is now under detailed investigation. A comparison of gas production rates in DEMO and under IFMIF irradiation conditions is

summarized in Table 2.2.5-6 [For details see Ref. 8 of this report]. The table shows that H- and He- generation are for both cases in the same order of magnitude with higher values in IFMIF. It is also shown that with increasing deuteron energy the transmutation rates increase further, which can be correlated with the higher amount of high-energetic neutrons. This result can, however, not be extrapolated to light elements where from former calculations it is known that a higher deuteron energy is more favorable in adapting the data to real situation.

In general, since the production rates and their absolute amounts are of great importance for the material behavior under irradiation, quantitative calculations will be necessary for relevant positions in future fusion designs. Appropriate irradiation positions in IFMIF have to be selected in order to fit these parameters as much as possible to the real situation.

The generation of solid transmutants is in most cases of minor concern and only in specific cases detailed analyses will be required.

Table 2.2.5-5. SPECTER calculations for damage and transmutation products using First Wall spectra provided by 3D Monte Carlo calculations (Fischer 1995).

	ITER			DEMO		
2 MWy/m2	damage (dpa)	He (appm)	H (appm)	damage (dpa)	He (appm)	H (appm)
Fe	20	228	890	17	180	709
Cr	20	361	905	18	282	722
Ni	21	790	3994	19	634	3222
Cu	21	251	1263	18	198	1006
V	21	114	477	18	89	374
Be	6.9	6510	98	6.9	5424	76
C	9.4	4302	1.2	9.2	3371	0.9
Si	27	860	1912	24	692	1524

Table 2.2.5-6. Comparison of gas production rates for a First Wall loading of 2 MWy/m2.

	DEMO *		IFMIF **					
			30 MeV		35 MeV		40 MeV	
	He (appm)	H (appm)	He (appm)	H (appm)	He (appm)	H (appm)	He (appm)	H (appm)
V	89	374	131	570	227	905	350	1280
Fe	180	709	260	1505	386	2220	528	3050
Cr	282	722	240	1410	401	2310	604	3470

* U. Fischer, FZKA Report 5633, 1995 [8]
** I. Gomes, FZKA Report 5633, 1995 [8]

2.2.5.4 Instrumentation/access

Thermocouples and temperature control and monitoring systems are required for all regions of the test cell. Standard dosimetry packets would be included with each experiment to determine the neutron spectrum and accumulated dose. It is anticipated that ionization chambers would be placed at several locations within the test cell to provide relative measurements of the time dependence of the flux. In the low and very low flux regions, some measurement of the ionizing dose rate would be required in many of the irradiation experiments, since some of the materials irradiated in these regions would be sensitive to damage from ionizing radiation. For the investigation of ceramic breeder materials under in-situ testing special measurements of the tritium release rate, and instrumentation with sweep gas lines, sweep gas supply systems and ionization chambers are necessary. The temperature control and monitor system, sweep gas supply system, ionization chamber etc. would be installed in a room adjacent to the test cells. The length of the sweep gas line should be short to provide quick response measurements of the tritium release behavior and to decrease the influence of adsorption of tritium on the piping wall.

2.2.5.5. Loading strategies

The likely operation scheme for the high-flux region of IFMIF utilizes alternating low-temperature (300-500°C) and high-temperature (600-1000°C) campaigns, where the irradiation campaigns are conducted in 10 to 20 dpa segments. The test assemblies in the high flux region of IFMIF would be inspected/replaced during the out cycles, and some of the irradiated specimens would be tested to determine their irradiated properties (the remainder of the specimens would be re-encapsulated and irradiated to higher dose). Achievement of DEMO-relevant lifetime doses of ~150 dpa for all three of the candidate first wall and blanket structural materials would require a minimum facility lifetime of more than 20 years, and a 40 year plant lifetime would clearly be desirable in order to allow for some alloy development work.

More detailed information about possible specimen loadings for the high flux region of IFMIF are found elsewhere. Although the comprehensive loading lists for the high-flux region assume a staggered irradiation schedule for capsules to be irradiated to different doses , the reference irradiation schedule has not been optimized for the limited high flux irradiation volume of IFMIF. Considerable changes in the present planning are expected when they are analyzed in more detail, particularly when the impact of flux gradients within the high-flux irradiation region are considered. However, analyses by materials scientists performed during the IFMIF CDA indicate that a "high flux" irradiation volume of ~0.5 L is adequate for performing qualifying lifetime irradiation tests on first wall and blanket structural materials for DEMO.

It is anticipated that the ferritic/martensitic steels would be encapsulated with Na (or NaK) in order to provide good thermal contact between the specimens and the facility coolant. The vanadium alloys would preferably be encapsulated with Li (due to lithium's more effective scavenging of interstitial impurities such as oxygen), whereas the SiC/SiC composites would likely be encapsulated with He gas (Li attacks the grain boundaries in SiC). Due to the likely use of different thermal bonding media for the three classes of materials (and also to minimize the possibility of cross-contamination), each specimen packet would typically contain only specimens from the same alloy class. If necessary, both SiC/SiC and ferritic/martensitic steel specimens could be packaged together in He-filled packets.

Examples of possible test matrices for various ceramic breeder specimen types, materials and irradiation conditions, and the volume of specimens/capsules are shown in Table 2.2.5-7 and 2.2.5-8 respectively. The total capsule volume for each fluence level is estimated to be 221 cm^3 (net volume) and about 440 cm^3 (including instrumentation, structural support, piping, etc.). It is likely that irradiation tests to three fluence levels would be carried out. If the three fluence level tests are carried out at the same time, the test volume required is about 1.3 L. If the three fluence levels are performed in series, the required test volume is about 0.5 L.

The loading strategy for the in-situ experiments in the low- and very-low-flux regions of the IFMIF test cell should include several irradiation chambers which can be accessed during irradiation to insert or withdraw specimens. At least one of these irradiation chambers should have the capability of cryogenic transfer of specimens. Some semi-permanent irradiation chambers could also be built in the low- and very-low-flux regions of the test cell, for use by in-situ or post-irradiation types of experiments that would be carried out over a long period of time.

All irradiation tests on ceramic breeders would be carried out as in-situ tritium release tests with various types of specimens in temperature range of 300 to 900°C with three temperature levels (300/400, 600 and 800/900° C) and fluences up to 35 dpa in steps of 10, 20 and 35 dpa and in an atmosphere of He and H_2. The expected irradiation volume required is in the range of 0,5 -1,3 L.

Table 2.2.5-7 Test matrices of ceramic breeders

Specimen Type	Dia mm	Thick mm	Temp deg. C	Test Items	Materials	Dose	Sweep Gas
Disk	10	2	400,500 &600	In-situ tritium release Neutron radiography Mechanical integrity Dimensional Change	Li_20 (L1) Li_2ZrO_3 (L2) Li_4SiO_4 (L3) $LiAlO_2$ (L4)	40 dpa* Max.	He+0.1% H2 (ref.)
Pellet	10	10	Temp. Gradient (400-900 for Li2O)	Density Change Microstructural Change Fracture Strength Tritium/helium retention	Li_2TiO_3 (L5) Innovative (I)		
Pebble	1	na	(300-900 for others)	Thermal Conductivity Radiation damage Li burn-up			
Compatibility							
Breeder	5	1.5	400,500 &600	Compatibility			
Structural	5	0.5					

Table 2.2.5-8 Specimen and capsule volumes

Specimen Type	Dia. mm	Th'k mm	Spec. Volume cu. mm	Capsule Config. mm	Capsule volume cu. mm	Spec./ Capsule ea	No. of Capsules ea	Materials	Temp. Deg. C	Total Vol. cu. cm
Disk	10	2	157	10x12x52	6240	6	1 Capsule/ mat'l & temp 1x6x3=18	L1,L2,L3, L4, L5, I	400,500 & 600	114
Pellet	10	10	785	14x20x25	7000	2	1 Capsule/ material 1x6=6	L1,L2,L3, L4, L5, I	Temp. Gradient	42
Pebble	1	na	0.26	9.5x9.5x 3.14x25	7085	Pebble Bed	1 Capsule/ material 1x6=6	L1,L2,L3, L4, L5, I	Temp. Gradient	43
Compatab'ty										
Breeder	5	1.5	58	14x20x25	7410	12 sets	1 Capsule/ temperature	L1,L2,L3, L4, L5, I	400,500 & 600	22
Structural	5	0.5	20							

For insulator materials the irradiations for PIE and in-situ experiments will be performed in medium or low flux regions up to 10 dpa (steps of 0,1, 1, 2, 5 and 10 dpa) between liquid He-temperature, 80 K and 600°C. A capability for the cryogenic transfer of specimen out of the test cell has to be provided for cryogenic irradiations. For instrumentation electrical resistivity measurement, dielectric loss measurement equipment and for optical measurements optical spectrometers will be necessary.

2.2.6 References

1. Report on International Fusion Irradiation Facility, Workshop San Diego, USA, February 14-17, 1989; Editors: J.E. Leis et al., Vol. 1 Evaluation Panel Report Vol. 2 Technical Presentations

2. Proceedings of the International Panel on 14 MeV Intense Neutron Source based on Accelerators, Tokyo, Jan. 14-16, 1991; Editors: A. Miyahara and F.W. Wiffen, NIFS-W2-2 Report 1991

3. D.G. Doran, F.M. Mann, L.R. Greenwood; J. Mucl. Mater. 174 (1990) 125-134

4. Proceedings of the IEA-Workshop on Intense Neutron Sources, Karlsruhe, September 21-23, 1992; Editors: K. Ehrlich, E. Daum, KfK-Report 5296, May 1994

5. D.G. Doran, S. Cierjacks, F.M. Mann, L.R. Greenwood, E. Daum; J. Nucl. Mater. 218 (1994) 37-41

6. D.G. Doran; Test Volume Considerations for an IFMIF; IEA-WG Report, Washington State University, Tri-Cities, May 1993

7. Proceedings of the IEA-Technical Workshop for an International Fusion Materials Irradiation Facility, Karlsruhe, 26.-29.Sept. 1994;Editors: K. Ehrlich, R. Lindau FZKA-Bericht 5553, July 1995

8. Proceedings of the IEA-Technical Workshop on the Test Cell System for an International Fusion Materials Irradiation Facility, Karlsruhe, July 3-6, 1995 Editors: A. Möslang, R. Lindau, FZKA-Bericht 5633, September 1995

2.3 OPERATIONAL REQUIREMENTS

IFMIF will be operated as a production facility with emphasis on high availability. To achieve this goal, three basis operating modes are planned. First an extensive start-up hot test period will be used to verify the functional characteristics of the equipment. With the completion of the start-up period, IFMIF will enter the normal operations mode that will be designed to provide safely the maximum fluence on the test specimens. A maintenance mode is planned to efficiently keep the equipment in operation. Finally, off-normal modes are predicted with the goal of reducing downtime resulting from infrequent and rare failures.

2.3.1 Hot Test Period

2.3.1.1 Introduction

The IFMIF facility is a powerful machine with unique operating characteristics. Therefore, it is essential to proceed step-by-step to continuous high-power operation since a functional test of the operating systems cannot be performed until the final hardware is installed.

The hot test period will start after each component (i.e., ion source, RFQ, DTL, RF system, target assembly, Li-loop, etc. been installed and tested). The duration of the hot test is expected to be two years. The estimated schedule is shown in Sect. 2.3.1.6.

2.3.1.2 Hot Test of Accelerator System

During system commissioning and hot testing, the accelerator will operate in four successive modes:

- up to 100% duty factor with high power RF, but without beam,
- up to 2% duty factor with H_2^+ beam operation into the high-energy beam calibration station,
- up to 100% duty factor with H_2^+ beam operation into the lithium target, and
- up to 100% duty factor with D^+ beam operation into the lithium target.

The third of these modes will also be used for lithium target system commissioning and hot testing, which is described below. The time required to complete these tests is to be determined.

2.3.1.3 Beam-on Test of Target Assembly

Since there is insufficient experimental data for confirmation of the heat load calculations used in the Li-target design, the target group requests a full power test of the target assembly. The testing period will evaluate the following characteristics of the lithium system:

- lithium boiling phenomena, flow stability, and response of lithium cooling system.

Parameters for the experiments are:

1. Period: one month,
2. Beam: H_2^+,
3. Beam energy: 40 MeV,
4. Beam current: available maximum current ,
5. Beam spot: a few cases (TBD),
6. Operation mode for the examination of heat load response (for B) TBD (some examples shown below).

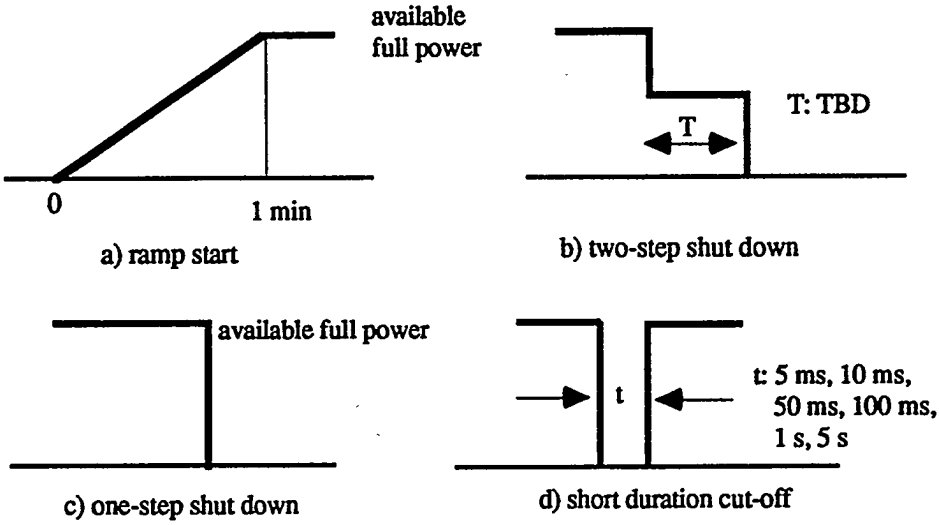

Fig. 2.3.1-1. Candidate test cycles to verify the lithium cooling system.

2.3.1.4 Hot Test of Target Backwall

A series of extended beam-on tests will be performed to verify the target concept. The overall test cycle will be approximately as follows:

1. ~3 months of operation with target A; preparation of target B in other Test Cell;
2. Switch beam and lithium loop to target B; and
3. ~3 months of operation with target B; backwall or target assembly of target A will be replaced.

One of the following targets will be selected based on results from the beam-on tests of the targets:

- replaceable backwall target with provision for multiple candidate materials as backwall material,
- FMIT-type (ferritic steel or vanadium alloy), or
- free jet target.

A detailed schedule of the hot test for the target back plates will not be made until the start of the hot test period.

2.3.1.5 Hot Test of Test Assembly

Performance testing of the VTAs will be combined with the target testing program.

2.3.1.6 Schedule of Hot Test

A detailed schedule of the hot test period will be defined later. A sample of the schedule is shown in Fig. 2.3.1-2.

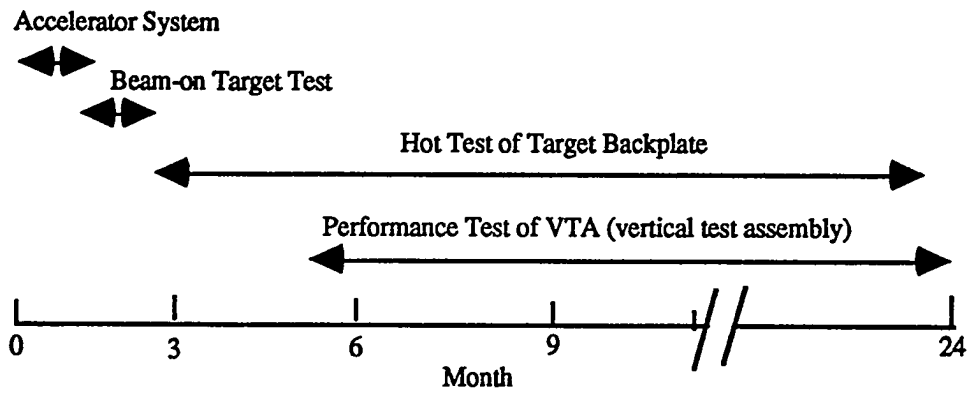

Fig. 2.3.1-2. Hot test period schedule.

2.3.2 Normal Operations

2.3.2.1 Introduction

Two target systems (A and B) will be alternated for usage as shown in Fig.2.3.2-1. One lithium loop system with redundant loop components will be used.

- ~9 months of operation with target A; preparation of target B in other Test Cell;
- switch beam and loop to target B; and
- ~9 months of operation with target B; preparation of target A in other Test Cell.

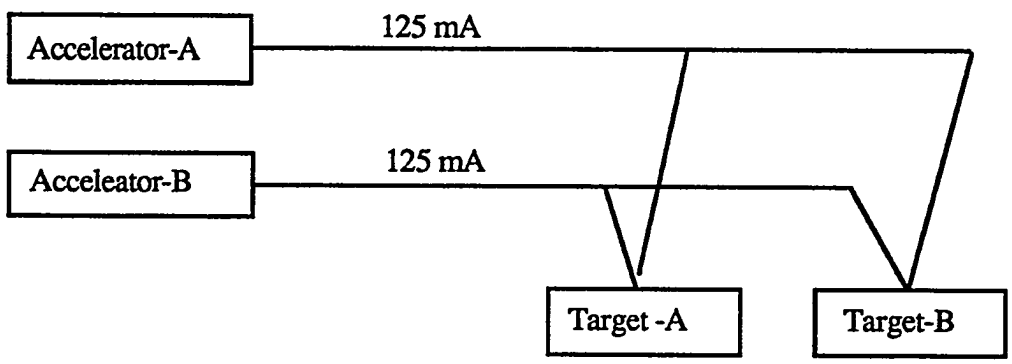

Fig. 2.3.2-1. Two-target arrangement.

In the case of normal operation, the beam turn-on and turn-off times are expected to be on the order of milliseconds and microseconds, respectively; see Fig. 2.3.2-2. These transient times are acceptable for the materials specimens and need no special handling any for both the Li-target system and the test assembly/module.

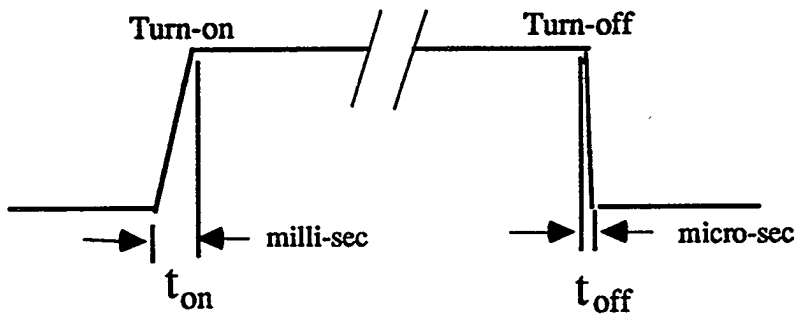

Fig. 2.3.2-2. Accelerator startup and shutdown timing.

2.3.2.2 Normal Operation of Accelerator System

2.3.2.2.1 Accelerator turn-on

The sequence of events for normal accelerator turn-on will typically involve the following steps:

1. Bring up support systems (controls, vacuum, diagnostics, cooling, etc.).
2. Adjust quadrupole currents to nominal values.
3. Condition RF cavities for high voltage operation using short RF pulses.
4. With cw rf operation, adjust RF feeds for nominal cavity amplitudes and phases (no beam).
   - Heat cavities with local oscillators.
   - Bring cavities to operating frequency w/servo controlled cooling loops.
   - Lock RF generators to master oscillator frequency.
5. Tune ion source and LEBT with D^+ and H_2^+ beams using low-energy beam calibration diagnostics.
6. With pulsed H_2^+ beam operation (≤2% duty factor), tune 30, 35, or 40-MeV beam from RFQ and DTL using beam-line diagnostics and feedback from diagnostics in high energy beam calibration station .
   - Measure and correct beam position and RF phase and amplitude errors.
   - Adjust optical elements in HEBT to achieve correct beam position and shape.
7. Switch magnetic optics to deliver pulsed, low-power H_2^+ beam-on lithium target. Confirm the beam characteristics and position from previous observations with feedback from target diagnostics.
8. Switch to pulsed, low-power D^+ beam-on lithium target. Confirm the beam characteristics and position from previous observations with feedback from target diagnostics.
9. Extend pulse width and pulse rate until full current cw operation while continuing to monitor the beam using the beam-on target diagnostics.

If the accelerator is being turned on for the first time after a long shutdown, then the full sequence will be required. It takes a few (TBD) days. However, for a routine maintenance period (e.g., a weekly 8-h shutdown, or a few-hour shutdown scheduled by a component failure), most of the systems can be maintained in their operational states. This will include, for controls, vacuum, cooling, and most of the RF system (except those stations which will need replacement or repair). Consequently, after a short shutdown, many operations will not be necessary, and the above sequence can be abbreviated. Indeed, if the accelerator is to be restarted after only a short shutdown (below), then only steps (7) and (8) may be required. In this case, the beam will be restarted in 1–2 mins.

2.3.2.2.2 Accelerator shutdown

Accelerator shutdown will be accomplished by turning off the beam production at the extractor of the ion source. If required, the beam current from one accelerator can be reduced from full power to zero during about 10 ms, providing a very fast shut-down capability.

Depending on the intended duration of the shutdown, the other accelerator subsystems will be left on or also turned off. The main concern during the beam shut-down is to assure personnel safety. A combination of controls and electrical and physical interlocks shall be employed to assure that the beam is not accidentally delivered to the target or to other locations that would constitute a safety hazard.

There is no difference between accelerator shutdown because the type of accelerator (e.g., superconducting) or variations in the design of the other facilities.

2.3.2.3 Normal Operation of Target System

2.3.2.3.1 Normal start-up

1. Evacuation of lithium loop system and target assembly, if necessary (est. time <8 h).
2. Heat up Li-loop system to 250°C (in parallel with step 1).
3. Pressurize dump tank and fill loop to quench tank (est. time <3 h).
4. Start the EM pump.
5. Circulate lithium to provide steady and stable flow (<1h).

Total estimated time: <12 h.

- Impurity control process not included.
- Evacuation of Test Cell occurs simultaneously in step 1.
- Lithium already melted in dump tank.

2.3.2.3.1 Normal shutdown

1. Beam off.
2. Decrease flow to at least 1–2% normal flow level (<1 h).
3. Continue circulation to remove decay heat (TBD).
4. Shutdown pump, coolant drains into dump tank* (<1h).
5: Cool down lithium loop .*

Total estimated time: <2 h.

*Not applicable if loop continues service to the second target.

2.3.2.3.3 Lithium loop shut-down

1. Shutdown pump, coolant drains into dump tank (< 1 h).
2. Cool down lithium loop .

2.3.2.4 Normal Operation of Test Assembly

2.3.2.4.1 Normal start-up procedure for Test Cell

The start-up procedure includes all the important operations that initially allow the operator in the central control room to start the irradiation. This start-up procedure begins after all VTAs to be irradiated are assembled and connected to the power supplies and the data control units.

1. Switch-on power supplies, coolant loops, specimen instrumentation and diagnostics electronics; examine functionality (2 h).
2. Start vacuum pumps of the test cell (~10^{-1} Pa) and coolant loops of the Test Cell walls (2 h).
3. Start up the VTA coolant loops to maintain the reference temperature ($\pm$ 5° C) (3 h).
4. Start up user control computer (UCC), program irradiation and control conditions, bring UCC in standby mode (i.e., data acquisition and control software are active).
5. Control all interlocks of Test Cell (0.5 h).
6. Start data acquisition on UCC. The users now ready or irradiation.
7. Ready-to-fire signal to central control system.

Total estimated time is around 8 hours.

2.3.2.4.2 Normal test assemblies shutdown

The shutdown procedures include all relevant operations to discontinue the irradiation because of a scheduled shutdown period. To change the specimens in the VTAs after several months or a one-year irradiation campaign is expected to take several days. Such scheduled shutdown periods will also be used for maintenance and for a change of experimental equipment in the user control room. During the shutdown, the interlock systems will prevent accidental beam-on conditions. Highly activated Test Cell equipment will also be monitored to insure personnel safety.

2.3.2.5 Time Chart of Normal Operation

A sample of the expected time chart for normal start-up is shown in Fig.2.3.2-3.

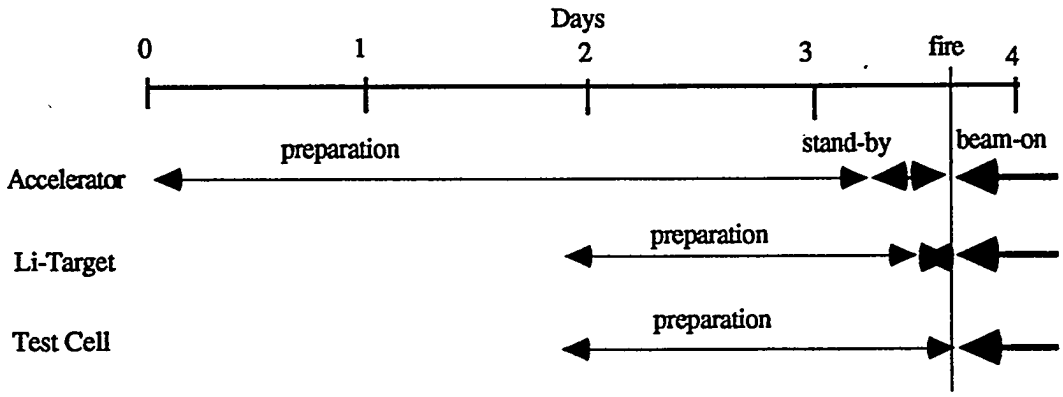

Fig. 2.3.2-3. Normal start-up time chart.

2.3.3 Maintenance Operations

2.3.3.1 Introduction

2.3.3.2 Maintenance Operation of Accelerator System

2.3.3.2.1 Accelerator turn-on after a short scheduled stop

The full sequence shown in Sect. 2.3.2.2.1 will be required if the accelerator is being turned on for the first time after a long shutdown. However, for a routine maintenance period (e.g., a weekly 8-h shutdown, or a few-hour shutdown scheduled by a component failure), most of the systems can be held in their operational states. This will include controls, vacuum, cooling, and most of the RF system (except those stations that will need replacement or repair). Consequently, after a short shutdown, many operations will not be necessary and the above sequence can be abbreviated. Indeed, if the accelerator is to be restarted after only a short shutdown (below), then only steps 7 and 8 may be required. In this case, the beam will be restarted in 1-2 minutes.

Scheduled ion-source switching will be performed in a preplanned manner with the spare source conditioned, brought up, and stabilized at low current before the operating source is switched off. The switching operation involves a change of polarity of the switching dipole and gradual ramping of the beam current to the full value. The beam downtime during the source switching operation performed in this fashion is expected not to exceed one minute.

There is no difference between accelerator shutdown because of the type of accelerator (e.g., superconducting) or variations in the design of the other facilities.

2.3.3.3 Maintenance Operation of Target System

2.3.3.3.1 Scheduled Shutdown

The Li-loop will continue to circulate during scheduled beam shutdowns. An operation mode will be planned to meet the requirements for this operation that is different from normal operation. Trace heating of the loop and purification will continue in a normal state. Steady temperature control on the target assembly and test cells should be maintained in this phase.

For long-term beam shutdown the Li-loop will continue to run for a period to be determined until the decay heat of the target assembly becomes negligible. The liquid lithium will then be drained into the drain tank. Trace heating will be continued to permit efficient start-up; however; for long-term shutdowns of the Li-loop, trace heating of the loop may also be shut-down. The drain tank will be kept at normal temperature so that lithium will remain liquid. Periodic scheduled preventive maintenance of the Li-loop and target system will be performed in this mode (lithium drained and liquefied).

Following the replacement of the target assembly, back wall, and other loop components, the Li-loop will be operated to clean and purify the lithium. Purification operation will continue until normal purity of the lithium is attained.

2.3.3.4 Maintenance Operation of Test Assembly

TBD

2.3.3.5 Time Chart of Maintenance Operation

TBD

2.3.4 Off-normal Operations

2.3.4.1 Introduction

The complexity of the accelerator/target system results in a large number of unpredictable failures, which will result in either brief beam-cuts or beam-off conditions. The impact of these conditions on the testing operations is important; consequently, operations are planned to address potential types of failures. This section discusses types of beam cut-off modes, effects, procedures, etc.

2.3.4.2 Off-Normal Operation of Accelerator System

2.3.4.2.1 Accidental accelerator shutdown

There will be a wide range of fault conditions that will force the accelerator to be shut-down, with different responses depending on the exact nature of each fault condition. Loss of vacuum in the target area or opening an interlock chain, for example, will result in an immediate beam abort, while other situations may produce only a warning on the operators console. As noted above, emergency beam shutdown can be accomplished within ten microseconds.

2.3.4.2.2 Start-up after an accidental shutdown

An accidental shutdown may force a long or short downtime, depending on the severity of the fault condition. If the downtime is very long (i.e., on the order of days to months) the start-up will have to follow the commissioning and initial start-up procedures outlined in Sect. 2.3.2.2.1.

In case of an accidental shutdown caused, for example, by an arc in the RF transport system or an accelerating cavity, the recovery will not take more than 1–5 min In such a situation, the RF station will be reset, and the system will be brought back up. To minimize the transients, the current will be ramped in a gradual manner.

An arc in the ion injector causes a beam transient during which excess RF power, which normally would be transferred to the beam, is reflected from the cavity. Circulators will direct this power to the load. At the same time, the RF control system will reduce the RF generator output. The beam will then be gradually ramped back to the full level in about 1–2 min time.

2.3.4.3 Off-Normal Operation of Target System

The Li-system should be designed to respond to an unexpected beam shut-down. The primary objective of this mode is to maintain the normal operation temperature of target, test cell and the Li-loop itself. Operation of the loop should be continued to maintain optimum conditions for this purpose until transition to the next mode—either restarting of the normal operation or changing to shut-down mode.

In the case of failure of the lithium system (such as a major lithium leakage), an emergency drain of the lithium should be performed. Following the drain, the temperature of the loop, including drain tank, will be reduced to minimize the possibility of lithium fire.

For minor leak that does not require an immediate lithium drain, circulation of the lithium will continue at a reduced flow rate (~10%) in order to remove decay heat and to maintain the temperature.

2.3.4.4 Off-Normal Operation of Test Assembly

Beam-on and beam-off scenarios are usually not predictable. The VTAs have to allow a failure of either one beam or all beams without any consequences to specimen irradiation conditions and to reliability of the system.

The IFMIF reference case has two independent accelerator systems. Both beams will have a totally overlapping footprint of 5 cm x 20 cm on the Li-target. This leads to several advantages during off-normal operation. It is not likely that both accelerators will go down at the same time. If only one accelerator system fails, the test group keeps going with the irradiation from the other beam. The reason is that a change in production rate by 50% is not a serious event for most of the irradiated materials, as long as it does not last several hours.

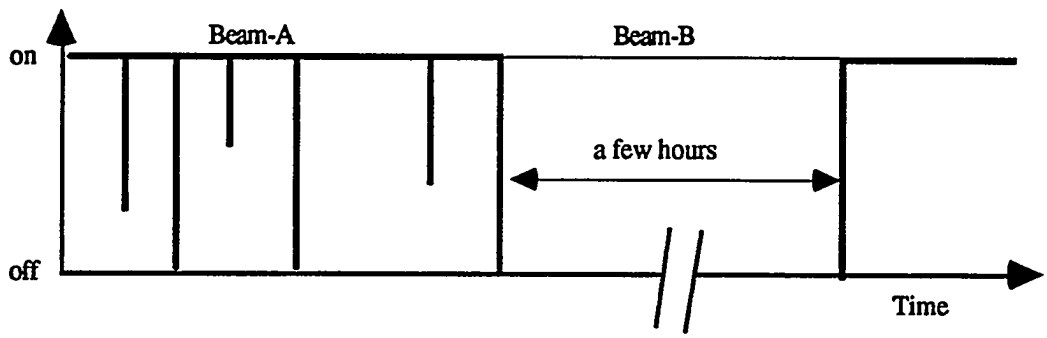

Figure 2.3.4-1 Single Beam failure: If Beam-A shut-down for several hours duration it will be acceptable

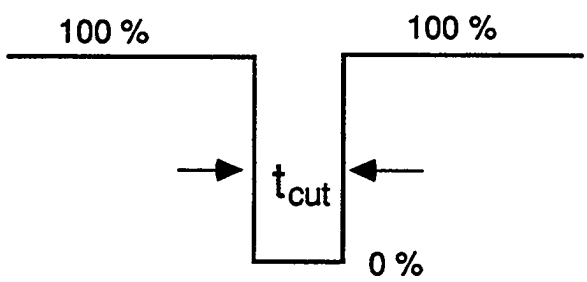

Figure 2.3.4-2 Dual Beam failure: If both beams shut down the same time only several minutes duration is acceptable

When all accelerator systems fail at the same time and the beam cut-off duration is expected to exceed the critical value of a few minutes mentioned above, all samples, which are heated at higher operation temperatures, should be cooled down to an appropriate temperature in order to prevent the annealing effect on the specimens. When the accelerator system return, these samples will heat up again immediately.

2.3.4.5 Time Chart of Off-normal Operation

TBD

2.4 TEST FACILITIES

This section describes the Test Facility subsystems, including test assemblies, test and service cells, and provides information on safety and RAM considerations. Alternatives and development requirements are outlined.

2.4.1 Facility Requirements

2.4.1.1 Operating Requirements

The IFMIF Test Cell and specimen testing areas must be capable of accommodating the wide range of environments associated with fusion reactor materials. The irradiation environment in the Test Cell must be capable of temperatures between 250 and 1000°C in the high flux regions (>2 MW/m^2 equivalent neutron wall loading; ~20 dpa/full power year (FPY) in Fe or V). Good access for in-situ testing must be provided in the medium (1 to 20 dpa/FPY), low (0.1 to 1 dpa/FPY), and very low flux (0.01 to 0.1 dpa/FPY) regions of IFMIF. Anticipated in-situ tests in the medium flux regions include creep fatigue, stress corrosion and crack growth tests on metals, and tritium release measurements in ceramic breeding materials. In-situ tests to be performed in the low-flux regions include electrical resistivity and dielectric property (loss tangent; dielectric constant at ~50 MHz-100 GHz) measurements on ceramic insulators, optical property measurements on optical fibers and window materials, and in-situ tests of diagnostic components. Cryogenic in-situ irradiation tests on organic insulation and superconducting materials would be performed in the very low-flux regions. The facility must be capable of irradiation temperatures of 250 to 1000°C in the medium-flux regions, 80 K to 500°C in the low-flux regions, and 4 K to 300°C in the very low-flux regions.

Hot cells and post irradiation facilities will be necessary for the remote-controlled timely insertion and removal of various kinds of irradiation modules for any maintenance of activated or contaminated devices, as well as for the complete post irradiation examination of all irradiated specimens and mock-ups. The post irradiation examination area and its test equipment should be able to establish for the irradiated classes of materials all relevant data for an engineering data base at the IFMIF site within a sufficiently short time.

In general, the design of the Test Cell should be consistent with margins that give confidence in achieving the users' requirements and in engineering performance. The design should be as flexible as possible to provide access for the introduction of new materials or irradiation loading conditions different from those specified in Sect. 2.2 (User Requirements). The design of any components or structures used in the Test Cell has to be confirmed by scientific and technological data bases expected to be available at the end of the CDA phase.

2.4.1.2 Safety and Maintainability Requirements

In accordance with the scope and requirements set by the parties, all remote maintenance capability will be provided such that personnel exposure during all kinds of irradiations, maintenance operations, or specimen handling and examination does not exceed the limits given by the national licensing authorities. To protect the health and safety of the site personnel and to control the overall radioactive inventory, the architecture of IFMIF must allow a consequent division of the plant into radiation zones. To meet other safety criteria and maintainability features that are consistent with the mission reliability and operational availability, the design principles shall also include:

- simplicity,
- fail-safe and fault-tolerant design,
- structural integrity and compatibility,
- redundancy, and
- testability.

These criteria are especially important for those components that have to withstand long-term irradiation exposure under a variety of different loading conditions. All IFMIF Test Cell components shall be designed in accordance with codes, standards, and guidelines deemed to be representative for the four parties. In a few exceptional cases (lithium-target backwall and structural material of the high-flux test module immediately behind that backwall), materials properties handbooks may not include all long-term loading conditions. For these two components that have the strongest interaction with the neutrons and the nuclear heating, the "design by experiment" approach might be necessary.

2.4.1.3 Nuclear Waste Production and Decommissioning

Almost all radioactive materials will be produced within the Test Cell that houses the lithium target and the vertical test assemblies (VTAs). Having one common room for the lithium target and the VTAs does not only meet safety requirements but also significantly reduces the activation inventory.

All devices and structural components exposed to relevant neutron irradiation will be fabricated with low or reduced activation materials. Depending on the actual alloy composition and the amount of tramp impurities, some of these materials have the potential that even after neutron exposure to DEMO-reactor relevant end-of-lifetime doses, their γ-surface dose rate decreases to the "hands-on level" of 25 μSv/h after a cooling period of 100-300 years typically. In general, the residual activity, dose rate, and decay heat of such materials satisfy the criteria for recycling or for the proposed classification of low-level waste.

Generally, the production of mixed waste shall be minimized. The treatment systems of the hot cells for radioactive waste generated in the IFMIF facility shall be designed with consideration of minimizing dispersion of radioactive materials. The hot cell should be able to manage all nuclear waste and to process it for storage and transportation to appropriate disposal facilities.

With the consequent use of reduced or low activation materials, the Test Cell design meets global requirements for efficient decommissioning of the IFMIF facility. Other design requirements for decommissioning include the use of modular components for easy dismantling and the segregation of radioactive components.

2.4.2 Facility Configuration

The plan and elevation views of the IFMIF Test Cell and post irradiation specimen-testing areas are shown in Figs. 2.4.2-1 and 2.4.2-2, respectively. The lithium target and all VTAs will be accommodated in one common Test Cell chamber without any barrier between the lithium target backwall and the high flux VTA. The Test Cell has a vacuum vessel that also serves as a steel liner for the confinement of radioactive material. This first robust Test Cell confinement provides accident protection to about 0.5 MPa absolute and allows a relatively easy cleaning of any liquid metal spills. The second Test Cell confinement is at least 2.2 m of concrete. Several advantages are combined by having a common Test Cell:

- The produced activity is concentrated in the lowest possible volume.
- The common Test Cell without barrier improves the Li-target access and allows maximum usage of the high-flux test volume.
- The common vacuum environment (10^{-1} Pa) serves several safety requirements.

[TBD]

Fig. 2.4.2-2. Elevation view of Test Facilities.

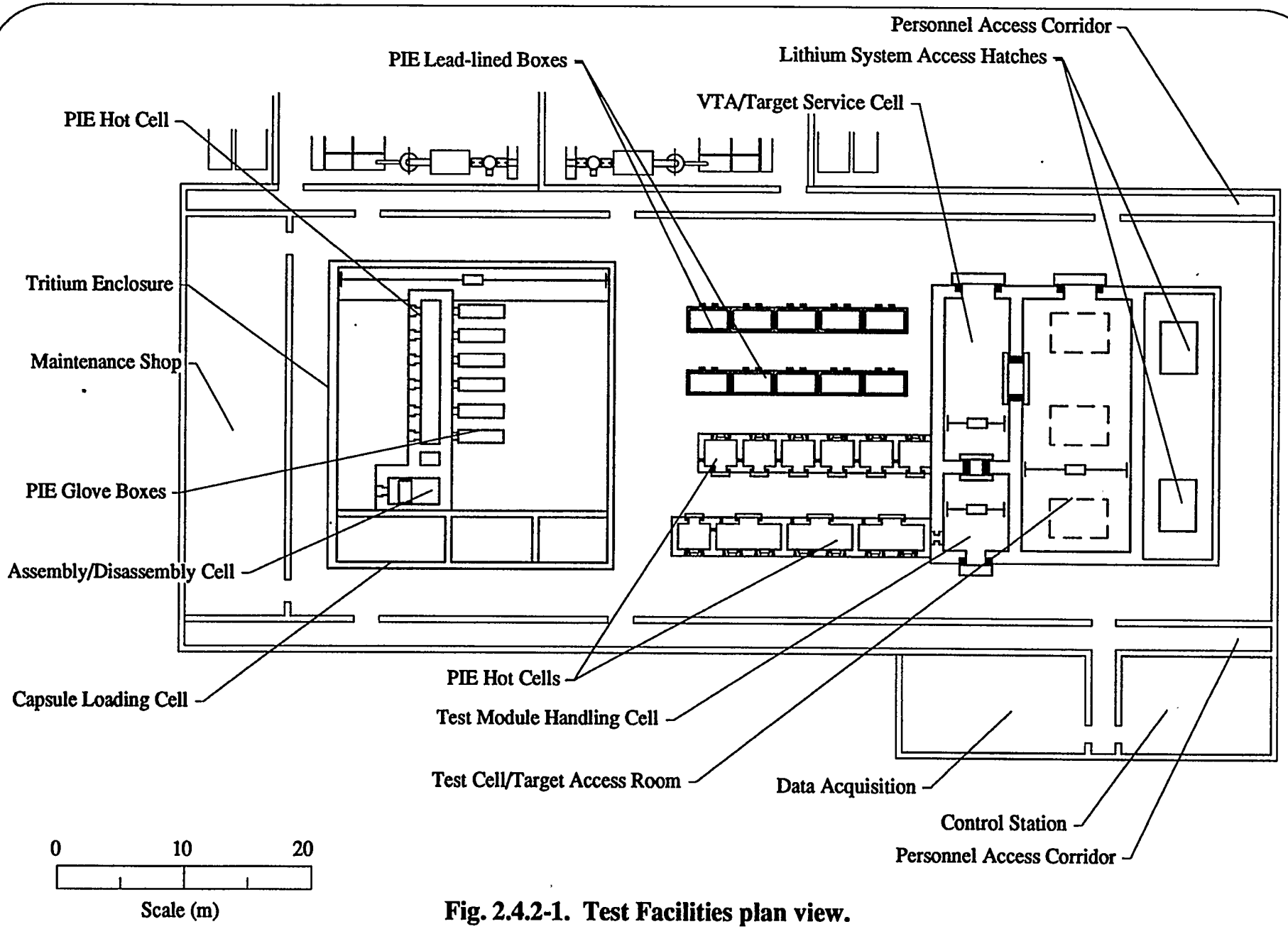

Fig. 2.4.2-1. Test Facilities plan view.

2.4.2.1 Test Cell

2.4.2.1.1 Test Cell vessel and heat shield

As shown in Figs. 2.4.2-3 and 2.4.2-4, the interior surface of the Test Cell will be constructed from low-activation stainless steel. Its thickness of [TBD] mm will sustain the 1 bar external pressure loading. Active cooling in the form of circulating gas, probably argon from the Test Cell access room, is provided along the external surface of the vessel. This will maintain the interior surface of the vessel to less than [TBD]°C higher than the surroundings in the Test Cell access room.

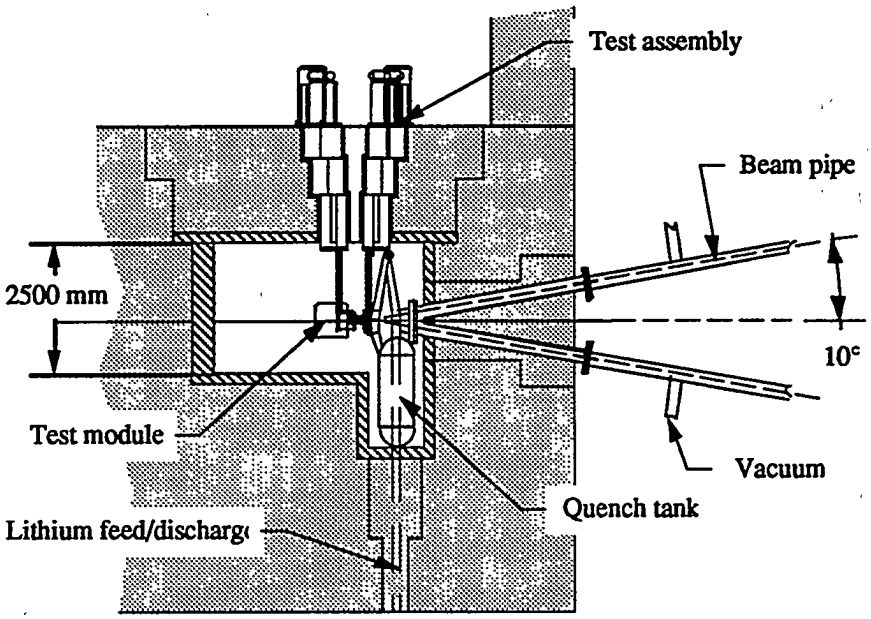

Fig. 2.4.2-3. Elevation section view of Test Cell.

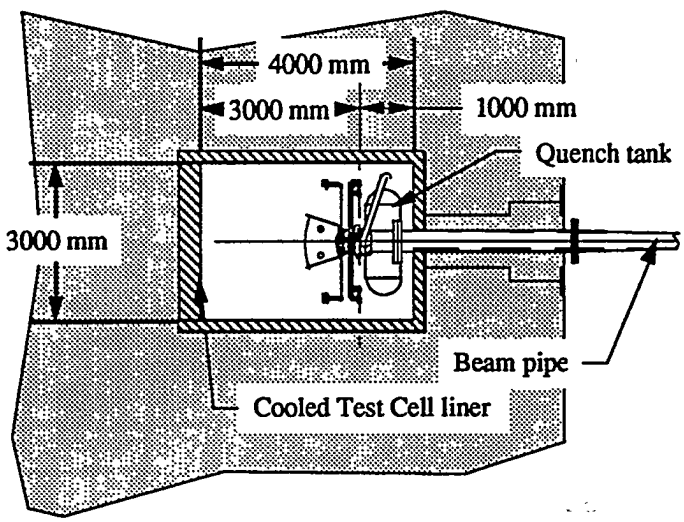

Fig. 2.4.2-4. Plan section view of Test Cell.

A heat shield is placed along the interior surfaces of the Test Cell vessel to reduce the neutronic heat loads in the concrete shielding surrounding the Test Cell. With the use of this heat shield, the concrete can be simply cooled from the edge adjacent to the Test Cell vessel, using the vessel gas-coolant system. This eliminates the need to use cooling passages embedded in the concrete shielding. A low-activation steel is used to construct this shielding with a thickness of ~400 mm needed along the surface facing the lithium target and ~200 mm along the other Test Cell walls. The shielding is cooled along its interior edge with helium contained in a series of passages that are welded along its surface. With this arrangement, the stainless steel heat shield temperature can be maintained to be less than [TBD]°C higher than the helium coolant at all locations. The peak temperature of the concrete shielding surrounding the Test Cell is expected to be only [TBD]°C higher than the Test Cell vessel cooling system.

2.4.2.1.2 Removable shield plug

The removable shield plug, which is placed along the top of the Test Cell as shown in Fig. 2.4.2-3, must be removed to gain access to the interior of the Test Cell. Remote handling equipment, including a crane located in the Test Cell access room, is used to lift the shield plug and transport it to the laydown area identified in Fig. 2.4.2-2. The removable shield plug thickness of 2.2 m is adequate to protect the equipment in the Test Cell access room (i.e., the dose to the equipment is expected to be small enough to allow the use of organic seal, lubricating, and insulating materials). Vacuum compatible seals are placed along the surfaces of the shield plug that mate with either the VTAs or floor of the Test Cell access room.

2.4.2.1.3 Vertical test assemblies

As shown in Fig. 2.4.2-5, the IFMIF Test Cell consists of various irradiation modules that are part of different test assemblies (not shown). Because each of these can be removed and replaced with vertical access, the overall assemblies are referred to as VTAs. These VTAs, which include the primary cooling system and controls for the test modules supported off their ends, penetrate through the Test Cell shield plug. The shielding portion of the VTAs consists of a stepped, stainless steel liner that is filled with concrete. As illustrated in Figs. 2.4.2-6 and 2.4.2-7, steps in the Test Cell shield plug conform to the steps in the shielding portion of each VTA to prevent radiation streaming. The vacuum seal for each VTA is located along its top plate, which mates with a plate on the floor of the Test Cell access room. The floor shield plug is removed by lifting it straight up. Once the floor shield plug has been removed, the VTAs can be lifted out of the Test Cell and into the Test Cell access room in any sequence without interfering with the remaining VTAs. The VTA that has been removed can then be transported to the VTA/target service cell where the test module is disconnected from the remainder of the VTA.

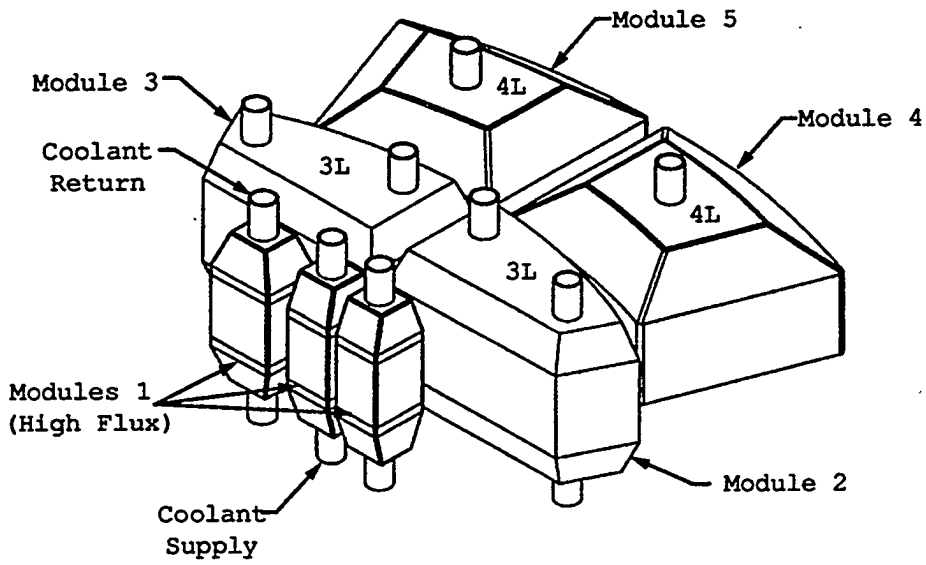

Fig. 2.4.2-5. Arrangement of high-flux (modules 1), medium-flux (modules 2 and 3) and low-flux (modules 4 and 5) vertical test assemblies in the Test Cell. The very low-flux VTAs are not shown.

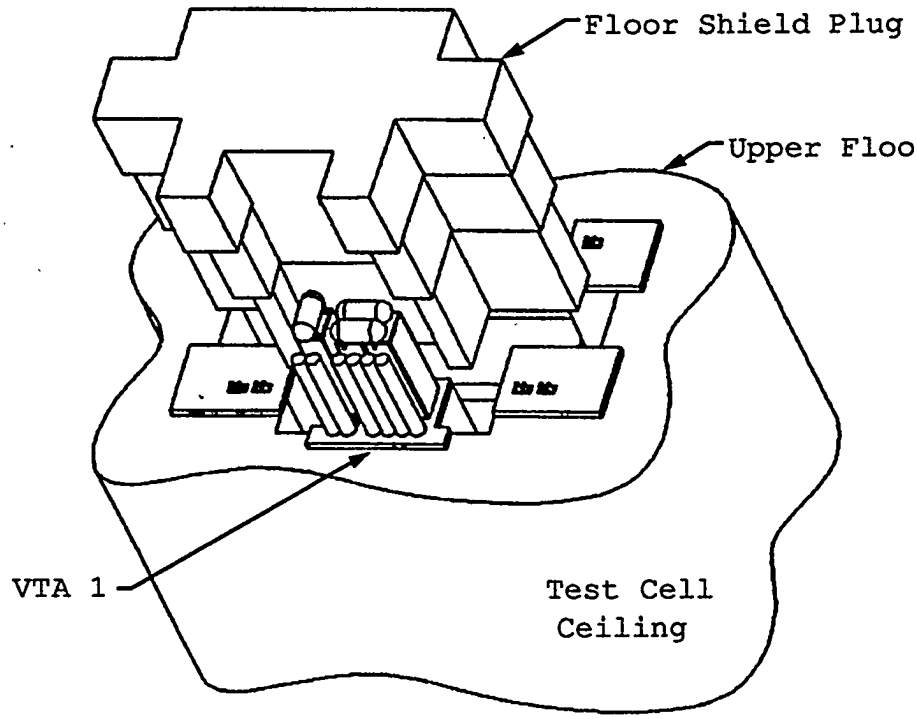

Fig. 2.4.2-6. Design concept for integrating the VTAs with the Test Cell shielding.

Vertical test assembly 1. VTA 1, which includes the 0.5-L high-flux module, is shown in Figs. 2.4.2-7 and 2.4.2-8. Within the NaK concept, each chamber of the high-flux module is cooled by a separate cooling system located on top of VTA 1. The coolant can be either helium or NaK. Helium will be used for high temperature irradiation loadings (i.e., above 600°C). In contrast to the NaK concept, the helium concept allows different temperatures within one single chamber. Each NaK cooling system consists of a 5-L sump tank, a 2.5-kW cooler, a 5-kW heater, and a 100-kg/min induction pump. The coolant supply and return lines between the cooling system and module are contained within the shielding body. Each coolant line passage is stepped to reduce radiation streaming.

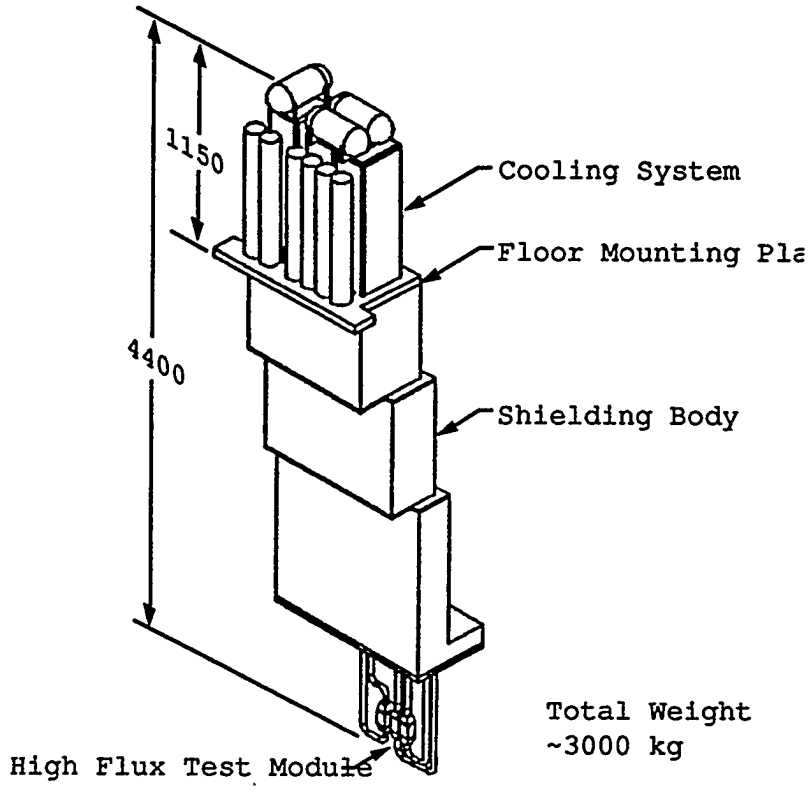

Fig. 2.4.2-7. Design configuration for VTA 1 including the high-flux test module (mm).

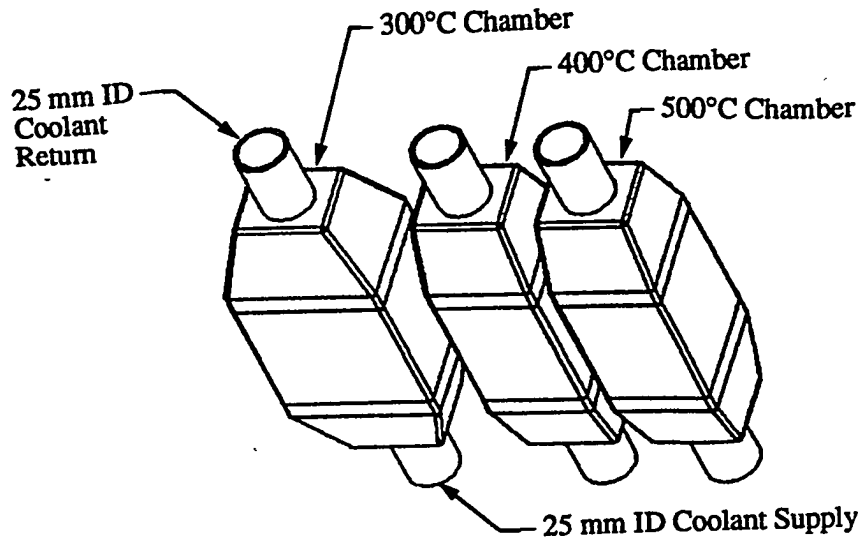

Fig. 2.4.2-8. NaK-cooled high-flux test module configuration with three chambers operating at different temperatures.

The IFMIF high-flux test module supported by VTA 1 has been configured to utilize the maximum amount of the available 0.5-L high-flux irradiation volume. Because of the need for an active temperature control system for the helium-cooled approach, the arrangement and packaging of test specimens in the high-flux module depend on the coolant. These arrangements are briefly described below for the two candidate coolants - NaK and helium. Further work is underway to determine the reference coolant (NaK vs He) for the different regions of the Test Cell.

<u>NaK-cooled concept</u>

The NaK-cooled high-flux modules are divided into three independently cooled chambers as illustrated in Fig. 2.4.2-8. Specimen packets, defined in Sect. 2.2 of this report, are stacked in rows as shown in Fig. 2.4.2-9. A 2-mm gap is provided between adjacent rows of specimen packets to allow the NaK coolant to flow over their largest side. The maximum thickness of the specimen packets may be limited by nuclear heating effects, depending on the method of specimen encapsulation in the packets (helium vs liquid metal encapsulation). Preliminary calculations indicate that the maximum nuclear heating in the high-flux region of IFMIF will be ~ 5W/g in ferritic/martensitic steel. Therefore, the maximum specimen thickness that will keep temperature differences through the specimens below 2°C is ~3 mm for a stainless steel specimen cooled on both faces. Specimen encapsulation in helium gas would produce larger differences the specimen temperature and the temperature at the exterior of the packet, because of increased thermal resistance in the small gap between the specimen and packet wall. For example, using a helium gas-gap thickness of ~75 μm between the stacked TEM disks and the packet wall to accommodate void swelling up to ~ 10%, the temperature difference between steel TEM disks and the packet wall would be ~ 20°C. All packets have been sized so that the maximum temperature difference between the specimens and the coolant is less than 20°C for helium gas encapsulation.

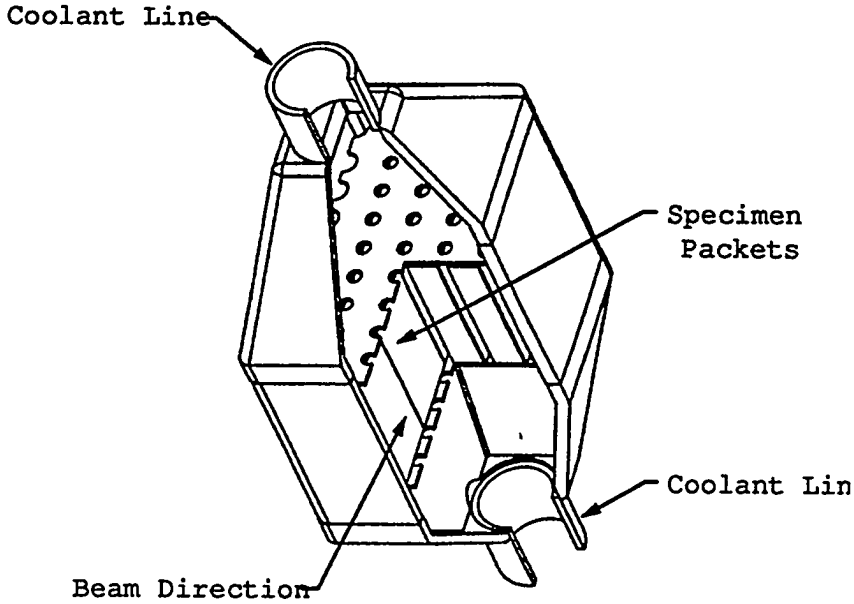

Fig. 2.4.2-9. Typical NaK-cooled high-flux test chamber with specimen packets arranged in rows to provide coolant flow passages.

The NaK-cooled modules are equipped with three chambers that maintain all test specimens within 25°C of the coolant inlet temperatures, including a 5°C temperature rise of the coolant from inlet to outlet of a test chamber. Each chamber is equipped with individual cooling lines. The NaK-cooled chambers, which operate at or below 600°C, are constructed from a ferritic stainless steel.

The seven different specimen geometries that are anticipated to be used in IFMIF are identified in Table 2.4.2-1, along with an identification of the number of specimens required for a "standard" low-temperature loading with chambers at 300, 400, and 500°C. These specimens, which will determine key properties such as density and microstructure, tensile strength, fatigue strength, fracture toughness, crack growth, impact behavior, and irradiation creep, are encapsulated in specimen packets. With the exception of the TEM disk packets (which would contain up to ~80 specimens), a total of one to six specimens would be encapsulated in each packet. The reference low-temperature loading for the high-flux region contains almost 1400 specimens. The total volume occupied by the packets in the reference loading is estimated to be 325 mL. Additional space required for the module structure and NaK coolant brings the total volume of the high-flux module to 0.5 L.

Table 2.4.2-1.
Material test specimens in a reference high-flux module

Type of test specimen	Geometry (mm)	No. of specimens[a] / vol. of specimen packets (mL)
Microstructure	TEM disk (3 dia x 0.25 t)	800 / 4
Tensile	Sheet tensile specimens (25 x 4.8 x 0.76)	156 / 45.2
Fatigue	Hourglass specimens (25 x 4.8 x 1.52)	96 /55.7
Fracture toughness	Disk compact tension spec. (12.5 dia x 4.6 t)	66 / 89.1
Crack growth	Disk compact tension spec. (12.5 dia x 2.3 t)	40 / 31.5
Dyn.fracture tough.	Notched bar (3.3 x 3.3 x 25)	120 / 61.6
Creep	Pressurized tube (25 x 2.5 dia)	104 / 37.4
Total		1382 / 325

[a] Dimensions were determined according to standard packing arrangements used for fission neutron irradiation capsules.

Helium Cooled Concept

The actual reference availability of 70% for IFMIF leads to a damage level of 15 dpa per calendar year in the high flux region in ferritic/martensitic steels. This damage level corresponds for the above materials to maximum nuclear heating densities of ~5 W/g (40 W/cm^3), (i.e., a linear power density of ~75 W/cm). For the sake of comparison, linear power densities in modern PWRs are ~400 W/cm, while typical power densities in MTRs (materials testing fission reactors) are ~10W/g. Those vales indicate that helium is a viable option for the coolant in high flux regions of the IFMIF Test Cell.

Helium as a coolant is fully compatible with the expected level of generated heat and allows specimen loadings equivalent to other options. Helium has good compatibility with structural materials and in particular with the lithium target. It is chemically inert over all operating temperatures and does not produce any neutron spectrum distortion. Furthermore, helium does not become activated from any sort of radiation and does not require special equipment or environment to work. Helium as a coolant has been extensively used in nuclear and other installations, and, as a result, its properties are well documented.

The He-cooled irradiation module is a vessel with irradiation rigs. Each rig contains the encapsulated specimens at the desired irradiation temperature. The vessel is completely compatible with the present design for the VTAs; thus, no important changes are needed. A preliminary estimate indicates that the volume occupied by the specimens is ~45% of the available high-flux volume.

Low temperature gradients in the specimen are achieved by operating the system in the region defined by low values of the biot number (i.e., with the lowest possible value of the ultimate film coefficient compatible with an effective cooling of the structure). Specific irradiation temperatures can be achieved with the use of gas gaps, a common procedure in most MTRs. This keeps the overall Test Cell structure (capsules, rigs, vessel structure) at low operating temperatures. The use of gas gaps to raise the specimen temperatures means that all of the irradiation temperature window (250—1000 °C) is independently available for each rig. It is also planned to use ohmic heating (with the irradiation capsule as the heater) to compensate neutron flux and neutron energy fluctuations, together with the drift of specimens thermal properties because of irradiation. This system is also used for temperature control in beam-off scenarios.

Helium properties are retained even at temperatures well above those limits acceptable for structures and materials. The coolant itself does not, therefore, impose a limit on allowable temperatures. However, limits are imposed on the coolant parameters so that the flow is maintained to keep the structure and components within design limits. Considering those limits, the approximate deduced parameters are shown in Table 2.4.2-2.

Table 2.4.2-2 Helium coolant parameters

Coolant inlet pressure (head)	1.2—3.5 bar
Equivalent average hydraulic diameter	10.5 mm
Coolant pumping velocity	11.0—25.0 m/s
Reynolds number	3×10^4
Ultimate film coefficient	1030 $W/m^2 K$
Mass flow rate	0.2 Kg/s
Volumetric flow rate	0.17 m^3/s
Coolant inlet temperature	50°C
Coolant outlet temperature	62°C
Pressure drop	<0.5 bar
Required compression ratio	1.2
Temperature increase due to compression	10°C

Thus, the requirements placed in the coolant and associated subsystems (compressors, heat exchangers) are low. Existing, well-proved technology is adequate and cost effective for He cooling requirements. Those low requirements and proven technologies together ensure a great degree of Test Cell availability and low engineering risk.

Under normal operating conditions, neither the capsule with the specimens inside nor the rig itself are constrained in the irradiation volume, and because of the low biot number, thermal gradients in the specimen, in the capsule, and in the rig are small. The helium Test Cell is thus a low stress system that allows design irradiation rigs with rectangular cross-sections to optimize the use of the irradiation volume.

Loss-of-heating power in specimens is undesirable during IFMIF operation. As a number of transients are unavoidable, a robust control system has to deal with such scenarios. Ohmic heating is a well proven technology in irradiation devices, and it fulfills all the requirements for fast temperature control. Together with the flow bypass and the structural effect, the temperature control system is able to maintain the specimens' temperature within the accepted limits, even for a complete loss-of-heating power (2 beams off), flux and energy oscillations, and increases in nuclear power.

Vertical test assemblies 2 and 3. VTAs 2 and 3, which house the medium-flux modules, are located directly behind the high-flux module and have specimen volumes of 3 L each. VTAs 2 and 3 are each divided into two chambers that are cooled independently. Several different types of in-situ tests are anticipated to be performed in the medium-flux region, including creep fatigue testing of structural materials, tritium release performance tests of ceramic breeder materials, and electrical conductivity tests on ceramic insulators. In addition, it is likely that some irradiations of PIE specimens of vacuum vessel structural materials and functional (mostly ceramic) materials may be performed in VTAs 2 and 3. The creep fatigue and tritium release in-situ tests would be performed in the medium-flux regions closest to the target, where the damage rate is ~5 to 20 dpa/FPY. The electrical conductivity tests could be performed in the medium-flux regions farthest from the target, where the damage rate is ~1 to 5 dpa/FPY. Gaseous helium will be used be used as the medium-flux module coolant for all irradiation temperatures since the available irradiation volume is rather large, and tritium released from ceramic breeding materials can be easily separated from helium. The VTAs must be capable of accommodating the equipment for the in-situ tests, such as hydraulic systems for the actuator of the creep fatigue testing machine. Since the volume requirements for the creep fatigue and tritium release experiments are fairly substantial (1 to 3 L), only one of these types of in-situ tests will be performed at a time (i.e., there will be irradiation campaigns of ~1 year that will be dedicated to one or the other type of in-situ test). A more detailed description of the in-situ tests is given in the following paragraphs.

The creep fatigue behavior of structural materials during irradiation in inert or chemical environments will be examined with a push-pull creep fatigue testing machine (Fig. 2.4.2-10(a)). The specimen is a hollow tube with coolant flow in the specimen interior to maintain a uniform temperature. In addition, in-situ slow-strain-rate tensile tests may also be performed using a similar test apparatus. Chemical environments such as liquid metal coolants may be selected to examine the impact of stress corrosion processes on the creep fatigue and stress corrosion cracking behavior during irradiation. It is not certain if water coolant tests can be performed in the Test Cell because of safety concerns with the Li and NaK liquid metals. The approximate size of the in-situ test equipment is 100 mm high, 80 mm thick, and 400 mm wide. Three creep fatigue specimens may be tested at one time in this equipment. A total of 6 coolant pipes and 15 electrical wires for thermocouples and the load-displacement signals are required. Three actuators for loading the specimen and the piping for the actuators are also installed in the VTA module.

The tritium release performance tests of ceramic breeder materials will use specimens in the shapes of disks, pellets, and pebbles that are contained in subcapsules. Tritium released by the specimens in the subcapsules will be swept up by helium gas flowing through the subcapsules and will be carried through pipes in the VTA to measuring equipment located in the Test Cell control room (see Fig. 2.4.2-10(b)). The tritium release test capsule would be ~55 mm high, 85 mm thick and 220 mm wide and would contain four separate subcapsules. One of the subcapsules would measure tritium release rates in pellet, pebble, and disk-shaped specimens with a temperature gradient ranging from 300 to 900°C. The other three subcapsules containing disk specimens would be irradiated at temperatures of 400, 600, and 800°C, with temperature control achieved by a helium gas gap. A total of 618 pipes (180 for helium sweep gas) and 97 thermocouples will be incorporated in the VTA.

The in-situ electrical resistivity measurements on ceramic insulators would be performed at temperatures ranging from ~100 to 600°C and requires sensitive electrical equipment that would be located in the Test Cell control room. It is also anticipated that in-situ tests of blanket insulators in contact with liquid metal coolant may be performed in this region. The specific design of the irradiation modules is not completed, but the VTAs must be capable of accommodating up to 20 mineral-insulated coaxial and triaxial cables and several thermocouple cables, along with He or liquid metal coolant pipes. The anticipated irradiation capsule size is ~100 mm high, 50 mm thick, and 80 mm wide.

Vertical test assemblies 4 and 5. VTAs 4 and 5, which house the low-flux modules, have specimen volumes of about 3.5 L each and are not divided into independently cooled chambers. Since tests in this region are expected to examine materials used in cryogenic environments as well as materials operating at elevated temperatures in the fusion reactor blanket and vacuum vessel regions, the temperature range is expected to be from 80 to 700 K. Liquid nitrogen or gaseous helium will be used as coolants. The capability to maintain cryogenic temperatures following irradiation (to prevent annealing of the radiation damage in specimens irradiated below room temperature) is considered to be an important feature for the VTAs located in the low-flux and very low-flux regions of the Test Cell.

Typical in-situ tests to be performed in this region include dielectric loss measurements on ceramics and diagnostic materials and optical absorption of optical fibers and windows. The VTAs should be capable of accommodating dielectric waveguides or rf cables and optical waveguides or fiberoptic cables. In addition, PIE tests on large specimens that are relatively sensitive to radiation damage would be performed in VTAs 4 and 5. Optical spectrometry and dielectric loss equipment (including rf power supplies and impedance analyzers) would be housed in the Test Cell control room to analyze the in-situ data.

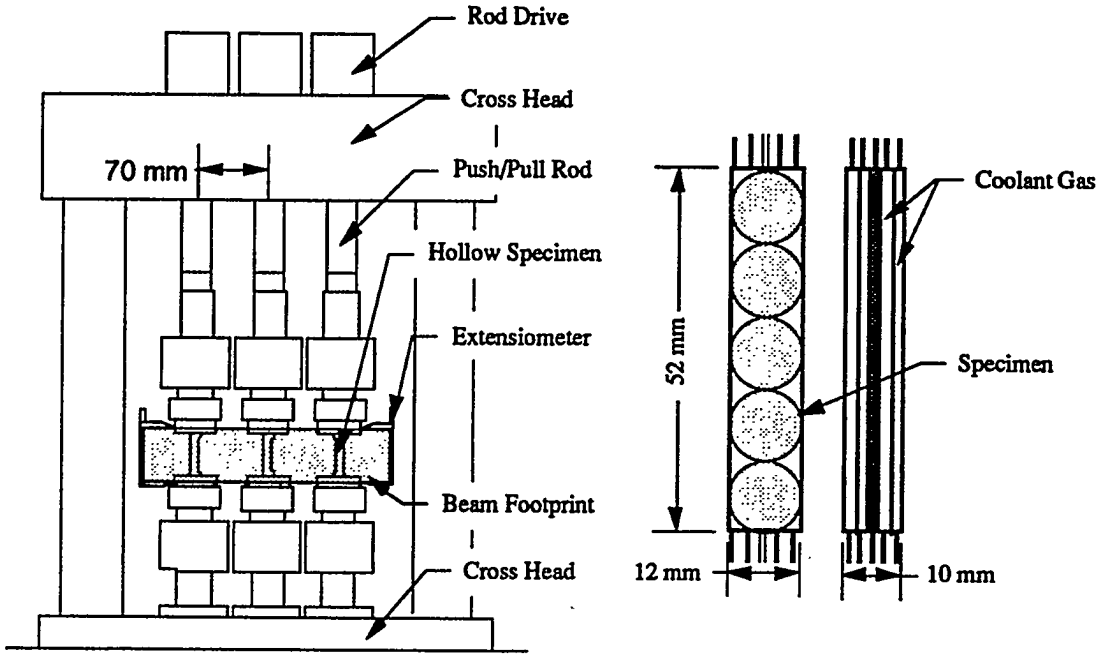

(a)
In-Situ Creep Fatigue Test Apparatus
Preliminary Design

(b)
Irradiation Capsule for Disk Specimens Disk
Specimens: 10 mm ϕ X 2 mm Tk

Fig. 2.4.2-10. In-situ test configurations.

Vertical test assemblies 6 and 7. VTAs 6 and 7, which house the very low-flux modules, have specimen volumes of 5 L each. In-situ and PIE tests of superconducting magnet materials, including conductors, insulators, and structural materials, will be conducted in this region of the Test Cell. Irradiation of dielectric materials at cryogenic temperatures will also be performed in these VTAs. Liquid or gaseous helium and liquid nitrogen will be used to provide the required temperatures ranging from 4 K up to room temperature. It is anticipated that additional dedicated irradiation tubes that can be accessed for short irradiation periods without breaking the vacuum of the Test Cell region (e.g., hydraulic rabbit tubes) will be included in this region. The capability of retrieving and storing specimens at cryogenic temperatures is considered to be an essential feature in this region of the Test Cell.

2.4.2.1.4 Test Cell access room

The Test Cell access cell shown in Figs. 2.4.2-1 and 2.4.2-2 is located directly above both Test Cells. With this arrangement, remote handling equipment can be used for operations in either Test Cell. Various items, including the VTA coolant flow pumps, sump tanks, valves, and heat exchangers, and the Test Cell vacuum pumping system ducts, valves, and pumps, and remote handling equipment, are located in this room. Adequate shielding has been provided to allow irradiation in one Test Cell during routine VTA removal and reloading operations in the Test Cell access room and the other Test Cell. An access port is provided between the Test Cell access room and the adjacent VTA/target service hot cell to transport VTA and target components during installation and removal operations.

2.4.2.1.5 Test Cell control room

All of the experimental parameters for the various VTAs will be monitored and controlled from a common experimenters control room located in the post irradiation examination room (see Fig. 2.4.2-1). The experimenters control room will be interfaced with

the accelerator control room so that key information can be exchanged. Information about the deuteron beam and lithium target performance will be monitored in the experimenters control room. If an extended downtime occurs because of problems with the accelerator or target, this interface will enable the operator to cool down the specimens in the Test Cell to prevent annealing of the radiation damage. Similarly, this interface will allow the accelerator and target system to shut down if an unanticipated failure occurs in one of the VTAs.

The key experimental parameters that will be monitored and controlled in the experimenters control room include the irradiation temperature of the various VTAs, the coolant parameters, and the relative radiation flux (obtained by ionization chambers). In addition, numerous data acquisition and control functions will be carried out in the experimenters control room for the diverse set of in-situ experiments that are anticipated to be performed in the medium, low and very low-flux regions of the Test Cell. A partial list of in-situ experiments that are expected to be performed in this facility include creep fatigue tests in inert and liquid metal environments, slow strain rate tensile tests to investigate stress corrosion cracking, tritium release rate in ceramic breeder materials, corrosion compatibility test in structural and ceramic breeding materials, electrical resistivity measurements on insulators, normal-conducting metals and superconductors, dielectric property (loss tangent and dielectric constant) measurements on ceramic insulators at 50 MHz-100 GHz, and optical absorption and luminescence measurements on windows and fiber-optic cables (see Sect. 2.4.2.1.3).

The in-situ tests will require several computers and specialized data acquisition equipment. The list of specialized equipment includes:

- tritium monitoring equipment,
- impedance analyzers, high- and low-resistance measuring equipment,
- optical spectrometer, and
- creep/fatigue control units and stress-strain visualization.

2.4.2.2 Hot Cells and Post irradiation Examination Facilities

2.4.2.2.1 VTA/target service hot cell

The access room immediately above the Test Cell region will be connected to a large hot cell that is primarily dedicated to the assembly and disassembly of the test modules to the VTAs. In addition, maintenance work on the VTAs and the Li target will be performed in this hot cell. Necessary equipment in this hot cell includes machining/cutting equipment (precision saw, milling machine).

2.4.2.2.2 Test module handling hot cell

The disassembly and reassembly of the test modules will be conducted in the test module handling hot cell, located immediately adjacent to the VTA/target service hot cell. The packets containing the individual specimens will be removed from the test modules, and the packets will be cut open to retrieve the irradiated specimens in this hot cell. The irradiated specimens will then be sorted and sent to the appropriate hot cells for testing or re-encapsulation. For tritium-containing or tritium-contaminated materials, only disassembly of the test module will be carried out in this hot cell, and retrieval of the specimens by cutting the capsule will be done in another hot cell (i.e., tritium-contaminated high-level radioactive specimen hot cells to avoid tritium cross-contamination). The test module handling hot cell will also be used for the final assembly of specimen packets into the test modules prior to irradiation. Necessary equipment in this hot cell also include machining/cutting (precision saw, milling machine) and welding equipment.

2.4.2.2.3 Post irradiation examination facilities

The plan view for the post irradiation examination (PIE) facilities is shown in Fig. 2.4.2-1. These facilities include an array of hot cells for testing conventional (nontritiated) irradiated materials, six hot cells, six shielded glove boxes for tritium-containing materials, and twelve shielded glove boxes for conventional irradiated materials. The tritium facilities require special containment and detritiation systems grouped in the same area. In some cases, expensive equipment is needed for PIE of both tritium-containing and nontritiated specimens (e.g., scanning electron microscopy, transmission electron microscopy). In order to minimize the costs of the hot cell laboratory, this expensive equipment is planned to be located within the tritium laboratory (hot cells or glove box areas). In most cases, there is no need for further examination of specimens following SEM or TEM examination. Non-tritiated specimens requiring further analysis after examination in tritium laboratory facilities will be decontaminated before exiting this area.

Two types of hot cell concepts are being considered to carry out PIE of the high-activity irradiated materials (i.e., conventional hot cells and modular-type hot cells). The modular-type design consists of removable boxes, a decontamination cell, a maintenance room, and a removable exchange system (miniature overhead crane system), all of which are contained inside one long hot cell facility. Specimen transfer is also performed using the overhead crane system. The removable boxes contain equipment are installed in different positions inside the hot cell. The removable box exchange system enables the rapid exchange of equipment to carry out maintenance or equipment replacement. The boxes containing equipment to be serviced or exchanged are transferred to a decontamination cell for decontamination of the equipment and the boxes. Another box containing the repaired equipment or a different type of equipment is installed just after the removal of the former box. Such a rapid exchange of the removable boxes produce the following advantages of the modular-type cells: (1) high availability of hot cells (PIE works in high efficiency), (2) flexible operation of hot cells to be optimized for PIE needs, and (3) use of automatic test equipment for miniaturized specimens for which frequent maintenance is required.

High level radioactive specimen hot cells. Most of the metallic and SiC/SiC composite materials irradiated in the high- and medium-flux regions of the Test Cell will be sufficiently radioactive that PIE must be performed in hot cells for high-level radioactive specimens. In addition, some testing on low- or moderate-activity materials irradiated in the low- and medium-flux regions of the Test Cell may also be performed in these hot cells if the necessary test equipment is expensive and already available in the hot cells. As mentioned previously, the scanning electron microscope for all irradiated specimens will be located in the tritium-contaminated hot cell area. Table 2.4.2-3 summarizes the PIE equipment and estimated space requirements for the high-level radioactive specimen hot cells, along with the shielded glove box laboratory and the tritium hot cells and glove box laboratory.

All of the hot cell PIE items except "specimen welding and encapsulation" can be contained in the removable boxes in the modular-type hot cell concept. Both conventional and modular-type hot cells can meet the requirements for the high-level radioactive specimen hot cells, although the modular-type hot cell concept is considered to have some advantages, as pointed out in the previous section. The main disadvantage associated with the modular-type hot cell design is possibly higher cost compared to conventional hot cells.

Table 2.4.2-3. Summary of Post irradiation examination test equipment and estimated space requirements

Conventional hot cells (10 modules)	Specimen welding and encapsulation	4 x 1.5 m
	Tensile tests (2 universal testing machines, 10 kN load cell, 20-1000°C, vacuum)	4 x 2 m
	Push-pull fatigue (fatigue testing machine, inert gas/vacuum, aqueous/liquid metal)	4 x 2 m
	Corrosion fatigue (Universal testing machine, SSRT test in aqueous/liquid metal environment)	2 x 2 m
	Fracture toughness (Universal testing machine, low- and high-strain rates in vacuum)	2 x 2 m
	Fatigue crack growth rates (fatigue testing machine)	2 x 2 m
	Pressurized creep tube tests (laser profilometry)	1 x 1 m
	Optical microscopy/specimen preparation (optical microscope, diamond saw, mechanical polisher)	2 x 2 m
	Irradiated specimen storage (computerized specimen identification system)	2 x 2 m
	Annealing of specimens (3 furnaces for long term anneals at high temperature in vacuum/inert gas)	2 x 2 m
Shielded Glove box lab. (10 bench-top glove boxes)	Optical microscopy specimen preparation (diamond saw, grinder, mechanical polisher, electropolisher	1.9 x 3.4 m
	TEM metallic specimen preparation (Grinder, electropolisher)	1.9 x 3.4 m
	Activation analysis system (Ge and Si-Li gamma ray spectrometer)	1.9 x 3.4 m
	Microhardness, etc. (microhardness tester)	1.9 x 3.4 m
	Precision density measurements (Immersion density equipment for TEM disks)	1.9 x 3.4 m
	Temporary vacuum storage grid for TEM disks (remote operation container)	1.9 x 3.4 m
	General purpose glove boxes (4 benches)	1.9 x 3.4 m each

Tritium hot cells	Retrieval of specimens from capsules and reloading irradiated specimens (cutter, welder)	2 x 1 m
	Fracture surface observation (scanning electron microscope)	2 x 2 m
	Storage of irradiated specimens (computerized specimen identification system)	2 x 1 m
	Examination for integrity (TV camera, photography)	2 x 1 m
	Dimensional change and density measurements (laser profilometry, immersion density equipment)	1 x 1 m
	Ceramography/compatibility (cutter, polisher, optical microscope, coater)	1 x 1 m
	Fracture strength (Universal mechanical test machine)	1 x 1 m
Tritium glove box lab.	TEM ceramic specimen preparation (grinding, dimpling, ion milling)	1.9 x 3.4 m
	Thermal conductivity (Laser flash type thermal diffusivity apparatus)	2 x 1 m
	Tritium/He retention (T/He extraction and measurement system)	1 x 1 m
	Li burnup (mass spectrometer)	1 x 1 m
	Optical absorption, raman spectroscopy, etc.	2 x 1 m

Shielded glove box laboratory. Shielded glove boxes are useful for PIE of very small or low-dose specimens of metals and ceramic insulator/diagnostic materials that have relatively low gamma-ray activation levels, since specimen handling is easy compared with hot cell operations.

Tritium-contaminated high level radioactive specimen hot cells. The capsules for some ceramic breeders, Li_2ZrO_3, etc., will be highly activated following irradiation. Retrieval of specimens from capsules and PIE for large pieces of highly activated ceramic breeders requires hot cells. In order to minimize the possibility of cross-contamination of tritium, hot cells for tritium-contaminated materials are separated from that for other materials. Removal of Li from vanadium alloys irradiated with liquid Li bonding also requires the tritium-contaminated high level radioactive specimen hot cells.

Handling of materials containing tritium should be performed under controlled inert atmosphere in airtight glove boxes or hot cells, depending on the activity of accompanying nuclides. The tritium area is located in the upper level of the building, and part of the hot cells and glove boxes (see next section) in the PIE facility are isolated in an airtight room. Figures 2.4.2-11 and 2.4.2-12, respectively, show the layout and birds-eye view of this tritium facility. Airtight hot cells are used as the secondary confinement of radioactivity, and dedicated atmosphere control will be provided. Primary exhaust from the experiments with tritiated materials will be sent to the facility effluent system. The airtight room is the third boundary for the radioactivity. Other supporting equipment for the tritium laboratory includes a tritium monitoring system and temporary waste storage.

After the disassembly of the VTAs, modules that contain tritiated material will be transferred to the tritium hot cell. The tritium hot cell has two independent sections – one for sample disassembly and another for sample preparation and tests with high gamma activity. Measurement hot cell is about five units of cell attached to the disassembly cell and has an independent atmosphere control. Samples are prepared for each measurement in the cell and sent to the attached glove boxes for each measurement. At this stage, samples are small, and the activity is low so that handling is expected to be possible in the tritium-contaminated materials glove boxes.

[TBD]

Fig. 2.4.2-11. Plan view of tritium facility.

[TBD]

Fig. 2.4.2-12. Birds eye view of tritium facility.

Tritium-contaminated materials glove boxes. PIE for small pieces of ceramic breeders, especially for low gamma-ray activated ceramic breeders, can be performed in an airtight glove box. Specimen handling is easy in comparison with hot cell work, and therefore, handing of small specimens and fine control of specimens positioning require PIE in the glove boxes. The atmosphere control and tritium confinement concept of these glove boxes are the same as those for the above-mentioned tritium-contaminated high-level radioactive specimen hot cells. Each glove box is independent so the instruments for the measurements can be operated, decontaminated, and repaired independently.

Each glove box contains a part of or an entire apparatus for characterization of specimens. Gloves are used for handling samples and maintenance of the instruments. Approximately six glove boxes are attached to the measurement hot cell. The glove boxes are filled with helium at the negative pressure of -50~0 mm H_2O. Inert atmosphere is recirculated at the rate of 2~5 times/h in normal operation. In the case of emergency, a glove box that detects the tritium release is isolated, and only this box is cleaned. Tritium is removed by scavenging with metal getters following processing by the zirconia cell that removes both oxygen and water in the process. The flow diagram is shown in Fig. 2.4.2-13.

[TBD]

Fig. 2.4.2-13. Tritium removal facility process flow diagram [TBD]

Microstructural characterization facilities. The microstructure of irradiated specimens will be examined using optical microscopes, SEM, or TEM. The SEM would be located in the tritium hot cell so that highly active specimens could be examined (see earlier section). The TEM will be located in a room adjacent to the tritium shielded glove box laboratory. Both tritium-contaminated and nontritiated specimens will be examined in these facilities.

2.4.3 Interfaces

This chapter gives a general description of the physical interface between VTAs, Li-targets, and accelerators. The common vacuum environment (10-1 Pa) serves several safety requirements and simplifies interface considerations between VTAs and targets as well as between Test Cells and accelerator beam lines.

2.4.3.1 Test Cell – Target Interface

The Li-target is an integral part of the Test Cell, and uses, therefore, the same safety interlocks as the VTAs. Emergency scenarios and safety considerations are described in Sect. 2.4.4. In order to use effectively the high-flux volume, VTA 1 will be positioned as close as possible to the backwall or nozzle of the Li-target system. A distance of 2 $\pm$0.5 mm is considered to be sufficient to avoid completely touching. Because of extremely good cooling efficiency of Li, the impact of additional thermal radiation from any high temperature VTA does not influence the lifetime of the backwall.

2.4.3.2 Test Cell – Accelerator Interface

Beam profile, beam density and beam position requirements

The beam profile, beam density, and beam position properties are, together with the beam-time structure, the major parameters defining the potential of IFMIF. Long-term stability of all of these parameters is strongly recommended. Precise beam positioning of less than $\pm$1 mm is necessary to use the total footprint area in the high flux VTA. Otherwise, a well-defined irradiation of small specimens with a 3 mm dia located at the footprint boundary would not be guaranteed. Also the beam profile should be as uniform as possible at the 5 x 20 cm flat top. At the edges, a sharp cutoff of the beam in vertical and horizontal direction is recommended to meet the high-flux volume requirements.

Test Cell environment

A vacuum of 10^{-1} Pa meets also essential requirements of the beam line reliability, because any catastrophic scenario (e.g., backwall failure) does not necessarily imply larger amounts of Li in the deuteron beam lines.

2.4.4 Safety Considerations

2.4.4.1 General

The primary safety hazard associated with the Test Cell and specimen testing areas is radioactivity. Nuclear criticality accidents are not possible since fissile or fertile isotopes will not be irradiated in this facility. Conventional safety hazards are minimal. For example, there will be some overhead crane lifting of heavy objects such as the shield plug and the VTAs, but this will be performed remotely so the hazards to personnel will be negligible. Additional overall safety considerations that need to be taken into account prior to the construction of the facility include the following:

- dose rate during normal operations (Test Cell and specimen testing areas – safety interlock systems required to eliminate possibility of accidental exposure of personnel to high radiation levels);
- potential for tritium release;
- accident scenarios for Test Cell (particularly for NaK coolant and Li – in general, water coolant would not be allowed in the Test Cell region because of incompatibility with Li and NaK);
- maintenance considerations for the Test Cell and specimen testing areas;
- potential for ground water contamination, activation of surrounding earth, etc.; and
- decommissioning (volume of activated waste requiring disposal, including possible activation of surrounding earth if shielding is insufficient because of neutron streaming).

2.4.4.2 Tabulation

Table 2.4.4-1 provides the FMEA factor descriptions. No quantitative analysis is made, and only possible causes and effects of off-normal events are identified and evaluated.

Table 2.4.4-1. FMEA factors

Ease of detection		
A	Easy	Immediately detected and alarmed
B	Limited	Detected with delay or needs observation
C	Difficult	No detection available
Frequency of occurrence		
A	Operational events	More than once per year
B	Likely events	$1/y \sim 10^{-2}/y$
C	Unlikely events	$10^{-2} \sim 10^{-4}/y$
D	Extremely unlikely events	Less than $10^{-4}/y$
Risk potential		
I	Normal	Operational caution required
II	Danger	Limited function
III	Minor hazard	Immediate halt and repair
IV	Major hazard	Accident, damage of facility
V	Extreme	Possible environmental effect

2.4.4.3 Failure Modes and Effects Analysis for IFMIF Test Cell

Table 2.4.4-2. FMEA analysis for the Test Facilities

(1) Test Cell Area:

Component	Purpose	Failure Mode	Effect	Detection	Mitigation or Prevention	Freq.	Risk
NaK coolant	Control specimen temperature	Process leak	NaK in Test Cell containm't	B. Pressure flow	Leak check	C	IV
		Stop	Lost cooling flow	A. Pressure flow	Current check interlock	D	IV
		Insufficient flow	Low target flow	A. Current flow	Periodical check,	C	III
Inert coolant	Control specimen temperature	Process leak	Poor vacuum in Test Cell	A. pressure flow	Leak check	C	II
		Stop	Lost temperature control	A. Pressure flow	Current check interlock	D	III
		Insufficient flow	Low target flow	A. Pressure flow	Current check	D	II
Coolant temperature control	Control specimen temperature	Heat exchange fail	Loss or poor temperature control	A. Temper-ature	Alarm, interlock	C	II III
Test Cell vessel	Maintain vacuum	Minor leak	Poor vacuum in vessel	A. Pressure	Leak check	B	I
		Major leak	Unable to evacuate	A. Pressure	Leak check	C	II

Target back wall	Isolate from liquid Li	Rupture	Li spill in Test Cell	A.Detection at the backwall	Interlock	C	IV
VTA	Contain specimens	Leak	In case of Li compounds tritium leak	A.Detection in the coolant	Leak check	C	II
Shield plugs	Shield maintain vacuum	Leak	Poor vacuum in Test Cell vessel	A. Pressure	Leak check	B	II
VTA remote handling	VTA mainte-nance, sample change	Mechanical failure	Unable to maneuver VTA	A.	Preventive maintenance	C	II

Component	Purpose	Failure Mode	Effect	Detection	Mitigation or Prevention	Freq.	Risk
Access room	VTA mainte-nance, sample change	Minor spill of contaminatio n	Contam'tion	A. Monitor swipe	Cleaning	A	I
		Tritium release	Contam'tion	A. Monitor swipe	Interlock	C	III
PIE facility	PIE Shield tritium confinement	Minor spill of contaminatio n	Contam'tion	A. Monitor swipe	Cleaning	A	I
		Tritium release	Contam'tion	A. Monitor swipe	Interlock	C	III

2.4.4.4. Results and Findings

Because of the relatively passive nature of the operation, the potential hazard of the Test Cell subsystem is much smaller than other subsystems, such as accelerator or target. The only active function of the Test Cell during irradiation is coolant circulation and temperature control of the specimen. Failure in this system is not anticipated to mitigate serious accidents because of the small inventory of the hazardous material that could be spilled. Besides than safety concerns, malfunction of this system will cause loss or degradation of the quality control of the irradiation test itself. Interruption of irradiation must be interlocked to the control of the temperature in the VTA.

Many of the mechanics in the Test Cell areas are mainly used in the maintenance period while beam and target are not operational. Failure in this system would cause a difficulty in maintenance and a changeover of samples that are not a direct safety issue.

It should be noted, however, that quantity of radioactivity to be handled in the Test Cell area is significant, and potential hazards related to this activity exists. Access of personnel to this area needs special attention, and remote handling technology is recommended to be utilized to maximum extent. The Test Cell access room and the PIE facility are the major areas where activity is handled. Personnel exposure, possible radioactive spill, and environmental release can occur from these facilities. They also are anticipated to be the major source of solid rad-waste.

2.4.4.5 Recommendations

It is concluded that the IFMIF Test Cell system does not have significant potential hazards during operation. Failure modes in this subsystem have relatively less importance compared to target or accelerator. In safety analysis, backwall rupture and Li spill in the Test Cell vessel cannot be neglected. The incorporation of a vacuum environment in the Test Cell vessel has significantly improved the potential safety of the Test Cell system in the event of backwall rupture.

It is suggested that the improvement of the design of the remote handling systems be emphasized as it has an immediate impact on workers' exposure.

2.4.5 RAM Considerations

The test system and its components shall be designed to minimize the system downtime and to assure minimum availability of 97.5% during normal operation. This level is required by the consideration of the overall availability budget for the IFMIF facility. The desired level of availability shall be achieved by first performing extensive design verification through testing and analyses on critical hardware and software. Redundancy shall be implemented where required and practical. Equipment that is expected to require replacement shall be designed for ease of maintainability. Diagnostics shall be provided to monitor the health of the system.

Failure modes relevant to the test system can be divided into three categories: leak events, rupture events, and failure-to-operate events. Depending on the frequency of occurrence, the failures can be categorized as routine, rare, and once-in-a-lifetime. Events can further be categorized according to the severity of their impact on the facility as low impact, off-normal, and major. The goal of the design shall be to achieve an alignment of these two categories so that the major failure events will be expected to occur once-in-a-lifetime or less frequently.

Two design options are currently under consideration for the test system – a He cooled system and a NaK cooled system. Reliability of both options was examined at the top level during the CDA. Once the selection of the final option is made, a detailed analysis of the selected option shall be performed. With the assumed component reliability characteristics, the overall availability and reliability of the He cooled test system option are higher than for the NaK-cooled test system.

2.4.5.1 Reliability

The failure rates used in the IFMIF reliability analysis for major components of the He-cooled test system are summarized in Table 2.4.5-1 below.

Table 2.4.5-1. Failure rates (per hour) for major helium cooled test system components

Component	Leak	Rupture	Failure-to-operate
Test rigs	TBD	TBD	N/A
Valves	TBD	TBD	TBD/valve
Filter	TBD	TBD	TBD
Compressor	TBD	TBD	TBD
Heat exchanger	TBD	TBD	N/A
He tank	TBD	TBD	N/A
Piping and fittings	TBD	TBD	N/A

The expected number of repairs over the 40-year life of the He-cooled test facility can be estimated by multiplying the above failure rates by 350,000, the number of hours in 40 years. The result shows that the expected number of leaks is to be sufficiently large (>1) that the test rigs and piping and fittings will fail. Therefore, maintenance capability shall be provided to deal with such leaks. Similarly, the probability of the failure-to-operate for valves (11 valves in the total system), filter, and compressor is also expected to be high enough to expect some failures to occur. The detailed IFMIF design effort shall reexamine this data to

decide whether technology can be improved to reduce the probability of these leaks in a significant way.

The failure rates used in the IFMIF reliability analysis for major components of the NaK-cooled test system are summarized in Table 2.4.5-2 below.

Table 2.4.5-2. Failure rates (per hour) for major NaK-cooled test system components

Component	Leak	Rupture	Failure-to-operate
Test chamber	TBD	TBD	N/A
NaK pump	TBD	TBD	TBD
Heat exchanger	TBD	TBD	N/A
Heater	TBD	TBD	TBD
Sump/exp. tank	TBD	TBD	TBD
Pipes and fittings	N/A	N/A	TBD
Thermocouples	N/A	N/A	TBD
Press. sensors	N/A	N/A	TBD

The expected number of failures over the 40-year life of the facility can be estimated by multiplying the above failure rates by 350,000. The results are expected to show that the number of repairs for the test chamber and the heat exchanger are high enough to require that repair capabilities be provided for potential leaks in these components. One has to observe, however, that the failure rate data for the test chamber are at this point highly uncertain since no material has ever been exposed to the type of neutron environment envisioned for the IFMIF high-flux test modules, especially at temperatures as high as 1000°C. IFMIF design ideas currently under consideration include rather frequent (i.e., every three months) retrieval of the VTAs for examination during at least the first year of operation. Such frequent inspections and potential replacement of the components in case of detection of defects shall significantly affect the failure rate of the component in question. Similar reasoning applies to the NaK pump, heater, pipes and fittings, thermocouples, and pressure sensors. It is to be noted, however, that the NaK pump and the heater are located on the top of the VTA and are, therefore, not exposed to the high neutron flux. Consequently, their failure rates should not pose as many questions as the failure rates of the test chamber structures.

2.4.5.2 Availability

The test system availability shall exceed 97.5% during the lifetime of the plant. Using information from Table 2.4.5-1, an availability model for the proposed IFMIF He-cooled test system will be developed. The mean time between failures (MTBF) and mean time to repair (MTTR) data employed in the analyses will be summarized in Table 2.4.5-3. For each component, the MTBF value will correspond to the failure mode with the highest failure rate in Table 2.4.5-1. The MTTR values will be based on engineering judgment.

Table 2.4.5-3. Availability data for major He-cooled test system components

Component	MTBF (h)	MTTR (h)
Test rigs	TBD	TBD
Valves	TBD	TBD
Filter	TBD	TBD
Compressor	TBD	TBD
Helium tank	TBD	TBD
Pipes and fittings	TBD	TBD

A RAM logic model of the test assembly system will be developed according to the procedures used for the accelerator and target facilities (Sects. 2.5.5 and 2.6.5). The availability and reliability calculations will also be completed in accordance with the procedures used in those sections.

2.4.5.3 Maintainability

Normal maintenance shall be performed on the test system and in the surrounding support areas during scheduled outages as part of the periodic maintenance program. Repair time as short as practicable shall be the design objective for system elements that have a reasonable expectation of becoming dysfunctional several times within the lifetime of the plant.

The maintenance and repair activities shall require access. Accessibility shall be considered in all aspects of the design. The He-cooled test system has the advantage of hands-on access with the beam-on to most components except for the test rigs because of the nonactivation of helium. This relatively easy accessibility shortens the repair time for many types of failures. The VTAs in the NaK-cooled test system design option are essentially self-contained, independent modules. The access to these assemblies, however, is not possible without stopping the beam and removing the assemblies. Since the materials of the VTA will be activated during the test, waiting for an appropriate period after retrieval will be necessary to permit radioactive decay processes to reduce the radiation levels. Spare VTAs can be used for immediate replacement, provided that restarting the experiments with new test samples is acceptable or that a method for remote retrieval of the old samples and their installation in the new VTA is developed.

Severe accidents, such as an NaK spill in the NaK-cooled test system option, have the potential to significantly affect the availability of the IFMIF facility, since the recovery from such a spill can potentially be lengthy, especially if the accident involves fire and/or plating of the NaK coolant on the walls of the Test Cell. Appropriate training of the maintenance personnel will be required to perform such operations fast and efficiently. A cold area mock-up and a training program shall be instituted prior to performing each repair task in this situation. Since many of the tasks are expected to be performed on an infrequent basis, the mock-up area will probably be put together on an as-required basis and the operators trained each time.

2.4.6 Fabrication, Assembly, and Installation

Approaches for fabrication, assembly, and installation of the Test Facility system have not been developed yet; however, these will receive attention during the next year of conceptual design as we generate a cost estimate for the test facility. The major elements of the test facility that will be considered in this effort are the test modules, test assemblies, Test Cell heat shield and vessel, removable shield plugs, and hot cells and post irradiation examination facilities.

2.4.7 Development Requirements

The only development program identified for the Test Facilities is fabrication and testing of a prototypical helium-cooled module and its thermal control system. This is required to verify that the precise fabrication for this system to operate properly can be reliably achieved. Further development efforts may be identified during later stage of the CDA.

2.4.8 Summary of Alternatives

The major alternative considered so far in the conceptual design of the Test Facility system is the high-flux module (VTA-1) coolant media. The two alternative coolants are gaseous helium or liquid metal (NaK). The present baseline incorporates both coolants. Helium is used for the high temperature specimen tests (i.e., tests above 600°C), whereas NaK is used for lower temperature tests. The performance for each coolant is described above in previous sections. The option to eliminate liquid metal cooling entirely and use only helium will be further considered during the next year.

Another alternative that has been proposed and may be considered in later stages of the conceptual design is the use of a more flexible test rig arrangement, whereby individual specimens or small packets of specimens can be removed or inserted without disturbing other test rigs, assemblies, or the Test Cell shield plug.

2.4.9 References

1. A. Möslang, R. Lindau (eds.), Proceedings of the IEA-Technical Workshop on the Test Cell System for an International Fusion Materials Irradiation Facility, Karlsruhe, Germany, July 3-6, 1995, FZK Report FZKA 5633, Forschungszentrum Karlsruhe, September 1995.

2.5 TARGET FACILITY

2.5.1 Requirements

2.5.1.1 Operational Requirements

The Target Facility shall provide a stable lithium jet in the target assembly for (1) reactions with the deuteron beam to produce high energy neutrons for irradiation of materials and (2) removal of up to 10 MW of beam power. The Target Facility will be designed to meet all safety guidelines and QA standards.

IFMIF shall have two Test Cells for optimal alternate operation and simultaneous operation in future expansion. There will be two phases of operation. In the first phase (< 2 years), each campaign will last approximately three months. At the conclusion of a three month campaign, the beam and lithium loop will be switched to the second target/Test Cell for the next campaign. These early campaigns are aimed at confirmation of the baseline target design and performance characterization of optional targets, as well as test assembly structures. The duration of subsequent first-phase campaigns may be changed based on test results from the initial campaigns.

In the second phase, each campaign is required to last approximately nine months with no change-out of backwall or target assembly.

2.5.1.2 Test Cell Size

The target assembly will be located in a shielded Test Cell. Minimum floor space requirement for the target assembly and its maintenance is 3.0 m wide by 1.0 m deep. Test Cell height of at least 2.5 m is needed, which includes a minimum of 1.5 m from the beam centerline to the Test Cell ceiling.

2.5.1.3 Availability

The Target Facility shall be designed to 95% availability in order to satisfy the IFMIF overall availability of 70% after the first 12-24 months of operation.

2.5.1.4 Target Chamber Environment

A vacuum condition of 10^{-3} Pa will be maintained in front of the lithium jet in the target chamber (accelerator interface). This vacuum condition is considered optimal to minimize or suppress lithium evaporation from the jet surface, yet will not have any significant interference with the deuteron beam.

2.5.1.5 Test Cell Environment

Test Cell environment requirements are dependent on a specific target design. Currently, the baseline target design is a modified FMIT-type target[1,2] with a replaceable backwall. Two options are (1) a scale-up of the original FMIT-type target and (2) a free jet target. Detail description of the target designs is presented in Sect. 2.5.2.2. The requirements of Test Cell environment are as follows:

- Vacuum condition of ~10^{-1} Pa for the baseline design with a replaceable backwall.
- Vacuum condition of ~10^{1} - 10^{3} Pa for the FMIT-type target. An alternative is to maintain a low-pressure inert gas (10^{4} Pa He or Ar) .
- Vacuum condition of 10^{-3} Pa for the free jet target.

2.5.1.6 Target Assembly Lifetime

For the replaceable backwall and free jet targets, the target assembly, with the exception of the replaceable backwall, will be designed to withstand neutron damage for a potential lifetime of 20 years. To minimize the effect of neutron damage, permanent

structure of the target assembly will be at least 10 cm from the edges of the beam footprint. However, possible nozzle erosion, detectable through degradation of jet stability, may shorten the lifetime goal.

The target assembly for the optional FMIT-Type target will be designed for a lifetime of approximately nine months

2.5.1.7 Deuteron Beam Energy And Spatial Profiles

Precise positioning of the beam footprint on the lithium jet and beam energy distribution are vital to the target design and lifetime. They are also important in generating the desired high -flux test volume. Beam characteristics in both energy and spatial profiles will be described in Sect. 2.6.3. The requirements are summarized below:

- Positioning of footprint centerlines : < ± 5 mm.
- Spatial extension of beam tail from horizontal edges: < 5 mm.
- Spatial extension of beam tail from vertical edges: < 10 mm.
- Standard deviation of nominal beam energy: 0.5 MeV.
- Maximum beam energy < nominal energy + 1 MeV.

2.5.1.8 Lithium Systems

The lithium systems facility includes the main lithium loop, the chemistry purification loop, the impurity monitoring loop, the lithium transfer system, and all loop components. The lithium systems are confined in a lithium cell located below the Test Cell. Requirements of lithium systems are as follows:

- Lithium cell space: 1.9 m high, 18.5 m x 20 m floor area.
- Local shielding to permit limited personnel access to lithium cell.
- Electrical power requirements : TBD MW.
- Remote handling equipment for removal/replacement of Hot and Cold Traps (~1000 kg).
- Safety monitoring and control methods including lithium leak detectors, smoke detectors, fire suppression material, Argon flood system and carbon microspheres, lithium cell atmosphere filter and monitor.
- Lithium spill cleanup system.

To permit future expansion to four beam lines, with simultaneous operation of both targets, a second cell space is provided.

2.5.1.9 Remote Handling And Maintenance

Lithium subsystems of the hot and cold traps and the target assembly shall be designed for full remote replacement and repair. The target assembly will be inserted or removed through the vertical port of the Test Cell. A minimum opening of 2 m by 2 m is required. This procedure requires all test assemblies be removed prior to installation/removal of the target assembly to provide sufficient access. Change-out of the replaceable backwall only requires removal of the high flux test assembly; the medium, low, and very-low flux assemblies may be left inside the Test Cell.

Replacement/maintenance actions should meet the following design goals:

- Be able to replace the replaceable backwall (~30 kg) in two days.
- Be able to replace an entire target assembly (~600 kg) within two weeks.
- Be able to repair a leak at a fluid joint within one week.
- The overhead crane used for removal of the traps shall also be designed for rearrangement of local shield blocks to permit limited hands-on maintenance of other loop components.

2.5.2 Facility Description

2.5.2.1 Introduction

The lithium target may be divided into two basic components. The first is the target assembly itself, which must present a stable lithium jet to the beam, where the kinetic energy of the deuteron beam is deposited and neutrons are produced. The second is the lithium loop, which circulates the lithium to and from the target assembly and removes the heat deposited by the deuteron beam. This loop also contains systems for maintaining the high purity of the loop required for radiological safety and to minimize corrosion of the loop structure by the hot flowing lithium. A single lithium loop provides flow to either of the target assemblies in the two Test Cells. A maximum 10% flow is provided to the inoperative target for decay heat removal. Provision is made for the addition of a second loop for possible future expansion to four beamlines and simultaneous operation of both targets. The target assembly and lithium loop will be briefly described.

2.5.2.2 Target Assembly

After a thorough assessment of various target designs, the modified FMIT-type target[1,2] with a replaceable backwall has been selected for the baseline design because of its several advantages. These include the potentially long (permanent) lifetime of the target assembly, a high facility availability, and a relatively simple remote handling scheme. In addition to the baseline design there are two options under consideration: (1) a scale-up version of the original FMIT target and (2) a free jet target.

2.5.2.2.1 Baseline Target Assembly

The target assembly, shown in Fig. 2.5.2-1, consists of a 10-cm ID inlet pipe, a transition component from inlet pipe to a flow straightener, a flow straightener, a nozzle, a replaceable backwall, a downstream diffuser with built-in drain baffles, a vacuum port for connection to the deuteron beam tube, and instrumentation stations on the vacuum port. The target assembly measures approximately 2.5 m tall, weighs about 600 kg, and is supported by hangers from the Test Cell ceiling. The vertical distance from the highest point of the inlet pipe to the beam centerline is about 1.5 m and ~1.0 m from beam centerline to the top of the quench tank. For 40-MeV deuteron beam and a beam footprint of 5 x 20 cm^2, the nozzle lip dimensions, (i.e., jet dimensions) will be 2.5 cm thick and 26 cm wide. Because of nuclear heating by backscattered neutrons, permanent target structure surrounding the beam footprint will be cooled separately on the outside (not shown in figure) by routing a small lithium stream from the inlet pipe. The vertical test assemblies will be located as close as possible (within ~2 mm) to the target backwall to receive maximum neutron fluence. They will not, however, be in contact with the target assembly because of the possible higher temperature of the test assemblies. An enlarged view of the beam-on-target region is shown in Fig. 2.5.2-2a. The wall surface on which the jet flows is flat for ease of fabrication and installation of the replaceable backwall. An alternative to the flat backwall is a curved backwall as shown in Fig. 2.5.2-2b. Depending on the backwall radius curvature, jet stability may be improved [1,2]. In either case, it is important to minimize surface discontinuity between the nozzle and the backwall. The shape and dimension of the flow straightener (or flow reducer), nozzle, backwall curvature, and downstream diffuser will be tested in laboratories using water initially, and lithium in subsequent mockup experiments."

The replaceable backwall is bolted to the target assembly as depicted in Figs. 2.5.2-3a and 2.5.2-3b. It measures approximately 50 cm wide, 65 cm tall with 10 cm deep sidewalls and weighs about 30 kg. Its thickness is nonuniform, tapering from a few centimeters at the edges to ~ 2 mm at the beam footprint. Details of the backwall are shown in Fig. 2.5.2-4. Seals around the edges will be needed to maintain different vacuum conditions in the target chamber (10^{-3} Pa) and in the Test Cell ($\sim 10^{-1}$ Pa). The target assembly, with the exception of the replaceable backwall, is designed to withstand neutron damage for a potential 20-year lifetime. To minimize the effect of neutron damage, permanent assembly structure is at least 10 cm away from the edges of the beam footprint. Another advantage of this design is that

because there is no welding of the replaceable backwall to the surrounding structure, it can be made of a different material from that of the target assembly. For example, a combination of ferritic steel target assembly and vanadium alloy backwall could decrease backwall replacement frequency.

2.5.2.2.2 FMIT-type target option

The original FMIT target shown in Fig. 2.5.2-5, is resized for a larger nozzle and flow rates, all else being identical. Vacuum condition of 10^1 - 10^3 Pa will be maintained in the Test Cell. Alternatively, low-pressure (10^4 Pa) helium or argon gas may be used. A low-pressure or vacuum Test Cell environment helps prevent the potential risk of backwall rupture as a result of pressure stress. Because the backwall is exposed to the most severe neutron damage, it will be the life-limiting component of the target assembly.

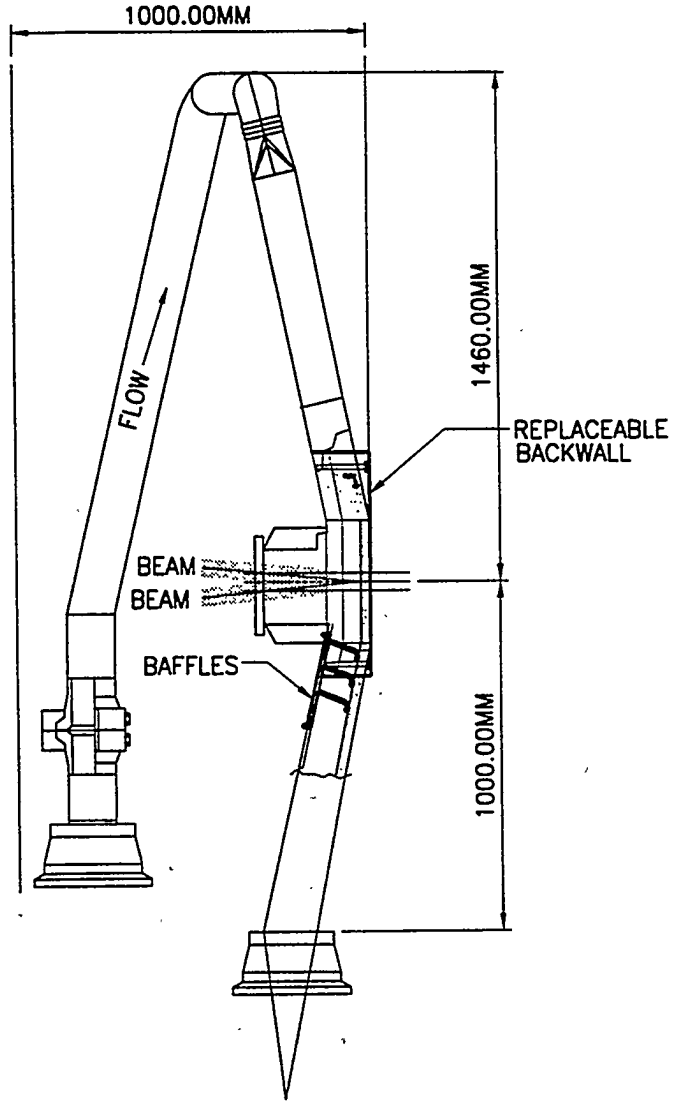

Fig. 2.5.2-1. Baseline replaceable backwall lithium target assembly.

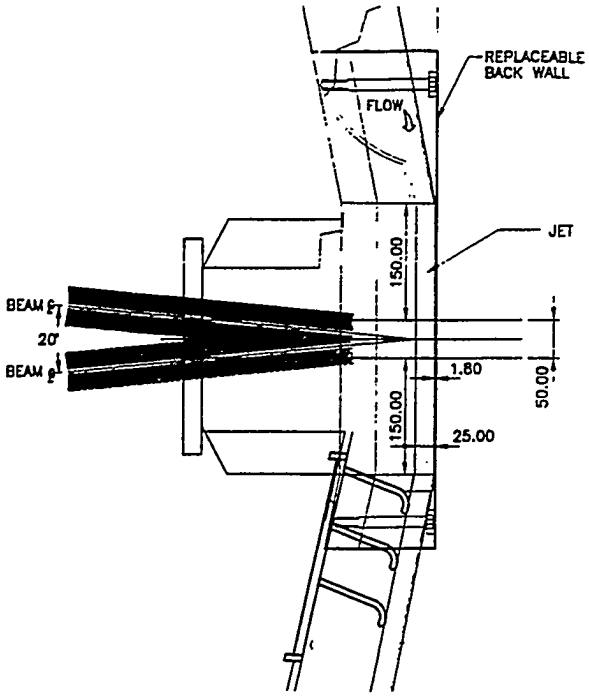

Fig. 2.5.2-2a. Enlarged view of beam-on-target region.

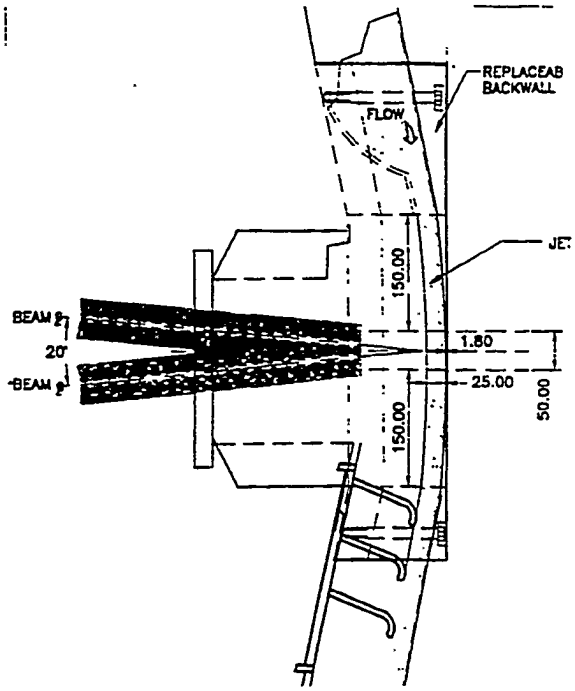

Fig. 2.5.2-2b. Enlarged View of the Beam-on-Target Region with Curved Backwall

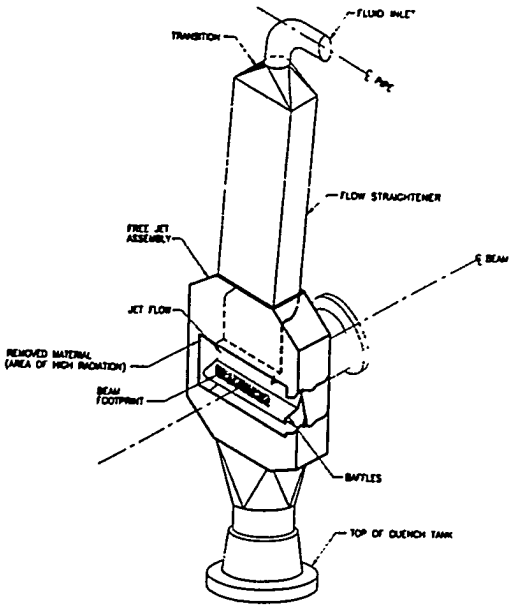

Fig. 2.5.2-3a. Attachment of replaceable backwall to target assembly.

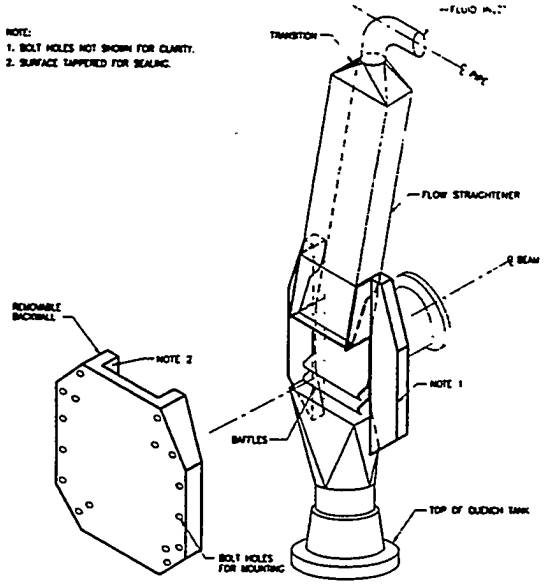

Fig. 2.5.2-3b. Attachment of replaceable backwall to target assembly- cutout view.

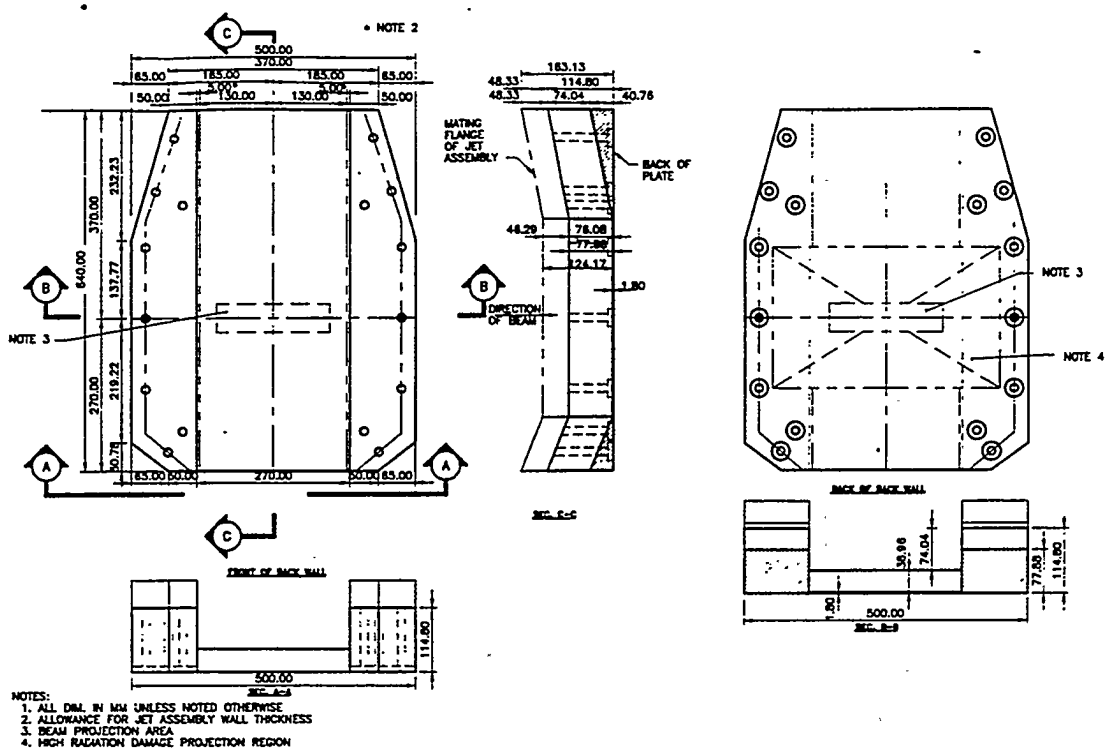

Fig. 2.5.2-4. Detail of replaceable backwall.

2.5.2.2.3 Free jet target option

The free jet target assembly, shown in Fig. 2.5.2-6, has no "backwall" eliminating the need for backwall replacement. After emerging from the nozzle and interacting with the beam, the jet is collected and its dynamic pressure recovered in a downstream diffuser. Since target assembly structure is at least 10 cm from the edges of the beam footprint, the assembly can be designed for a permanent lifetime, subject to possible nozzle erosion. Because there is no physical boundary between the target and test assemblies, the Test Cell must be maintained at the same vacuum condition of the target chamber (10^{-3} Pa), which may be the most challenging requirement imposed by the free jet option.

Alternatively, the first wall of the high-flux test assembly may serve as the physical boundary to maintain a pressure difference between the target and Test Cell. In essence, the test assembly first wall acts like the replaceable backwall of the baseline design. This option, however, requires changes to the test assembly dimensions to conform with the free jet target opening. In addition, the impact of temperature difference between the test assembly (up to 600°C for NaK-cooled test module) and the target assembly (<250°C) requires further analysis.

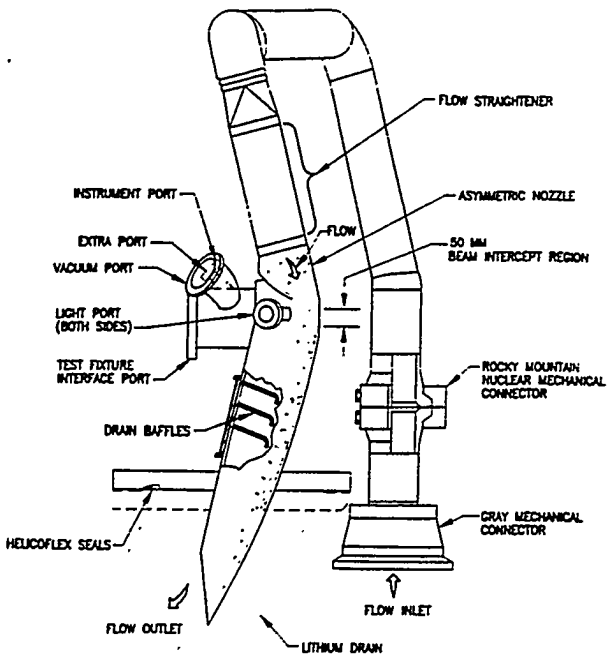

Fig. 2.5.2-5. FMIT-Type target assembly.

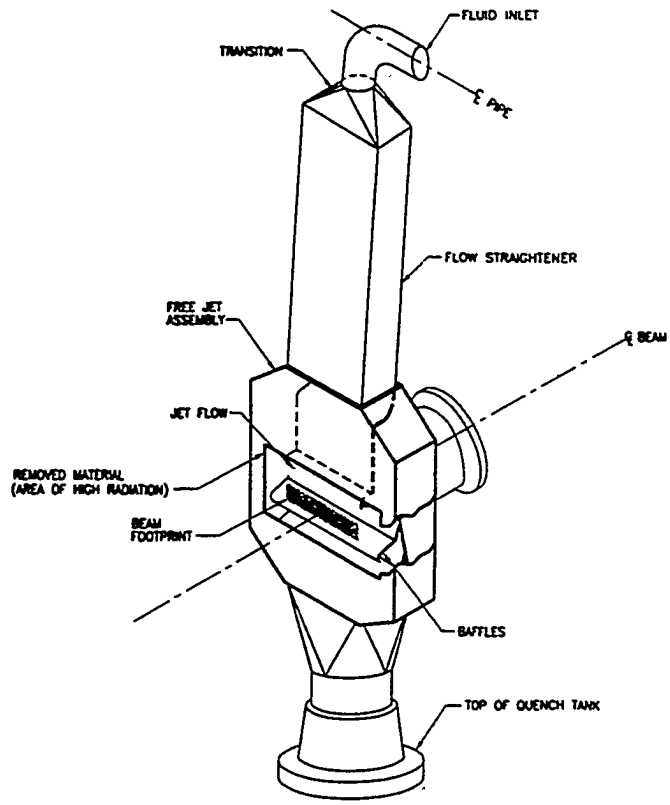

Fig. 2.5.2-6 Free jet target assembly.

2.5.2.3 Lithium Jet Parameters

Table 2.5.2-1 summarizes the lithium flow parameters for 40-MeV D^+ beam with a Gaussian standard deviation of 0.5-MeV. Total beam current is 250 mA. Analysis of beam-on-target interaction and jet thermal response have been presented in references 3 and 4.

Table 2.5.2-1. Lithium jet parameters

Jet thickness, m	0.025
Jet width, m	0.26
Jet velocity, m/s	15 (range 10-20)
Inlet temperature, ^oC	250
Outlet temperature, ^oC	300 (for 15 m/s)
Surface temperature, ^oC	290 (for 15 m/s)
Peak temperature, ^oC	400 (for 15 m/s)

2.5.2.3 Lithium Loop

2.5.2.3.1 Main loop

A simplified flow diagram of the lithium loop is shown in Fig. 2.5.2-7. The loop may be conveniently divided into three basic functional systems. The first is the main loop, which circulates the lithium to and from the target assembly, and is illustrated by the heavy line in the figure. Two targets are shown, since the loop must be able to deliver flow to either of the Test Cells. The major components in this loop are the target quench tank, the surge or overflow tank, the lithium dump tank, the organic dump tank, the main electromagnetic pump, and two heat exchangers. All of the piping and tanks are constructed of austenitic stainless steel (either 304 or 316). Excellent performance of a large SS 304 lithium loop at IFMIF relevant conditions of temperature and flow rate was obtained[5]. Additional corrosion/erosion studies of austenitic steels have also shown good long term behavior[6,7]. There are, in addition, a trace heating system (to maintain the temperature throughout the loop above the melting point of the lithium at all times the liquid metal is present in the loop), thermal insulation, valves, electromagnetic flow meters, instrumentation, and connections to vacuum and argon headers. Table 2.5.2-2 lists the approximate volumes and dimensions of the major main loop components, including the total lithium inventory of about 12,600 L.

Table 2.5.2-2. Approximate main loop component dimensions

	Volume (liters)	Dimensions (meters) dia x length
Quench tank	2,270	1.0 x 2.9
Surge tank	2,200	1.0 x 2.8
Dump tank	15,100	2.0 x 4.8
Heat exchanger	7,000	1.8 x 3.8
Main piping	2,300	15- and 20-cm dia pipe
Total lithium inventory	12,600	N/A

The quench tank transfers and distributes the heat deposited by the beam into a liquid pool to avoid any boiling phenomena and thermal shock to the loop piping. It has been sized to the volumetric flow requirement of up to 110 L/s. During normal operation the surge tank contains only the thermal expansion overflow of the loop, but must be sized to accommodate possible backflow from the quench tank. The dump tank, located at the lowest elevation of the loop, must accommodate all of the lithium in the system. During loop maintenance, and off normal events, the dump valve opens, and a gravity drain empties the loop into the dump tank. The tank must be heavily shielded to permit limited personnel access into the lithium vault during system shutdown.

The lithium from the main loop flows into the shell side of a conventional tube-in-shell heat exchanger, which contains an organic heat transfer fluid on the secondary tube side. A slight positive pressure on the tube side prevents leakage of the lithium into the secondary side during a tube leak. The heat exchanger has been sized to remove up to 10 MW of heat, with 30% allowance for tube plugging. The organic fluid will be subject to the high radiation field from the impurities in the lithium. Since the magnitude of this field, as well as its effects on the flow and thermal properties of the organic fluid, are not well known, an organic dump tank has been included to permit change-out of the organic fluid. The primary heat exchanger will have to be shielded, since insoluble activation products will accumulate on the large, cool surfaces inside the HX tank. The organic fluid flows into an organic-water secondary heat exchanger that transfers the heat to the ultimate heat sink.

The main electromagnetic pump must be sized to provide a flow up to 110 L/s to the operating target, as well as 10% of this flow to the second target for removal of decay heat from the target structure, for a total flow requirement of 120 L/s. An annular linear induction pump (ALIP) has been selected as most appropriate for this application. Two options of this pump design are being considered, a straight-through duct design and a return-duct design. The straight through design has greater efficiency but requires cutting and rewelding of pipe

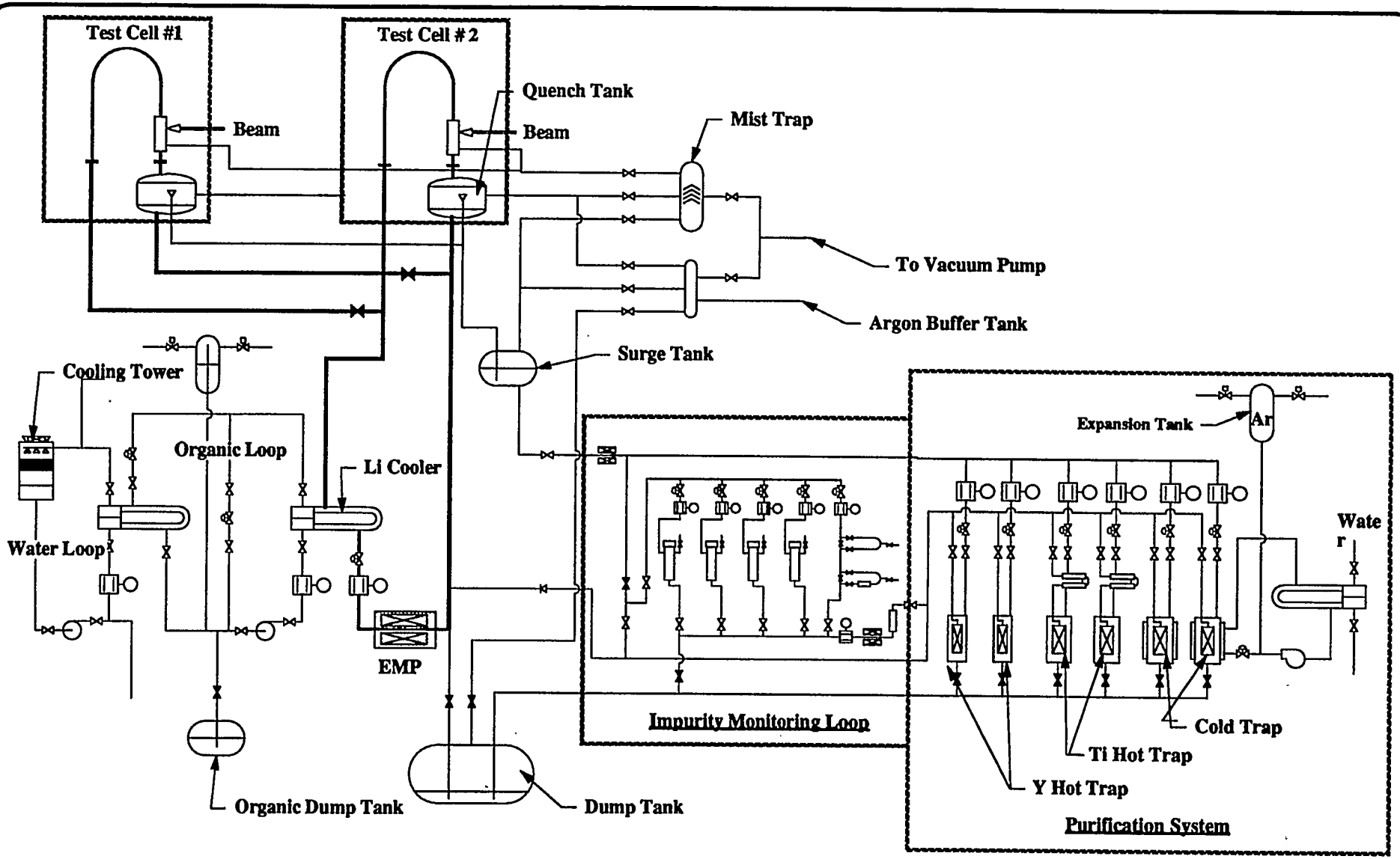

Fig. 2.5.2-7. Lithium circulation system concept

for removal in the event of a pump failure. The return-duct design has both inlet and outlet connections on the same side of the pump, permitting replacement of the stator coils without disconnecting any of the pump connections. A short circuit in the stator coils is the most likely cause of pump failure. The estimated power requirement of the return-duct type of ALIP pump is 200 kW.

Analysis of pump performance shows a net positive suction head requirement (NPSH) of approximately 0.043 MPa. This is the minimum pressure that must be present at the pump inlet to avoid cavitation. Cavitation would result in instabilities in the jet, as well as greatly accelerated corrosion of the piping in which the cavitation is occurring. Since the system must operate under vacuum, this pressure is provided by the static head of the lithium above the pump inlet. This height requirement is approximately 8.4 m. The current layout of the Target Facilities as shown in Fig. 2.5.2-8, provides a head of over 12 m and, therefore, provides significant margin to cover calculational uncertainties and unanticipated flow losses.

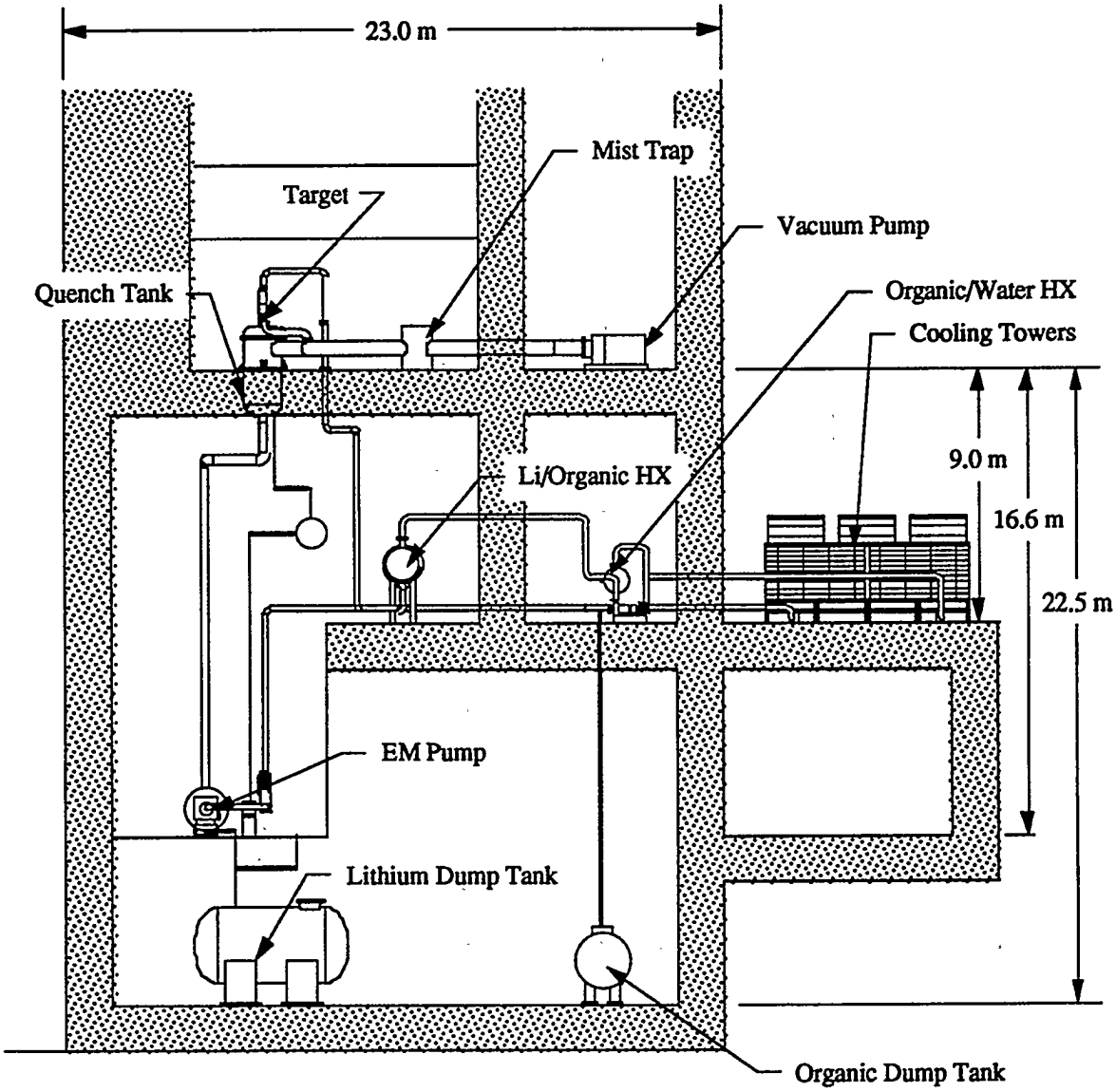

Fig. 2.5.2-8. Cross section layout of test and lithium cells.

2.5.2.3.2 Lithium purification system sub-loop

The lithium purification sub-loop, shown in Fig. 2.5.2-9, consists of a system of hot and cold traps to remove various impurities and auxiliary supporting equipment (small EMP, flow meters, valves, trace heating, and connections to argon/vacuum headers). Since planned and unplanned maintenance capability are required during operation, full redundancy is provided. If a trap requires regeneration, or in the unlikely event of a fault (as indicated by the impurity monitoring systems), the alternate trap will be valved in. The trap will then be removed to a hot cell during the next scheduled maintenance for regeneration or repair. Because of the high activation of the trapped impurity products, fully remote handling is required. Localized shielding around the traps is also needed to permit limited personnel access to the loop cell.

The major impurity product expected, in terms of quantity, is the deuterium deposited in the lithium jet by the beam. Removal is required to prevent the buildup of the hydride, a highly corrosive compound. Tritium is produced by direct reactions of the beam with the lithium, as well as by capture of low energy return neutrons by Li-6. Total tritium production is estimated at 15 g/year. It is essential to minimize the tritium inventory in the system, since this could be the dominant source term in the event of a radiological release. Tritium is removed by the cold trap, with hydrogen sparging to reduce the tritium fraction.

The most highly radioactive impurity is expected to be Be-7, a 53-d half-life material produced from (d,n) and (d, 2n) reactions with lithium[8,9,10]. If not removed, this product will build up to a saturated activity of 140 kCi. The cold trap will remove Be-7, but some is expected to plate out around the loop, and will very likely dominate the remote handling requirements. Corrosion products will also be removed by the hot trap.

The hot traps will be used to remove primarily nitrogen and carbon. Both are common impurities in lithium. Nitrogen forms highly corrosive compounds with lithium and may build up as a result of air in-leakage during vacuum operation. Carbon can build up from HX tube leakage.

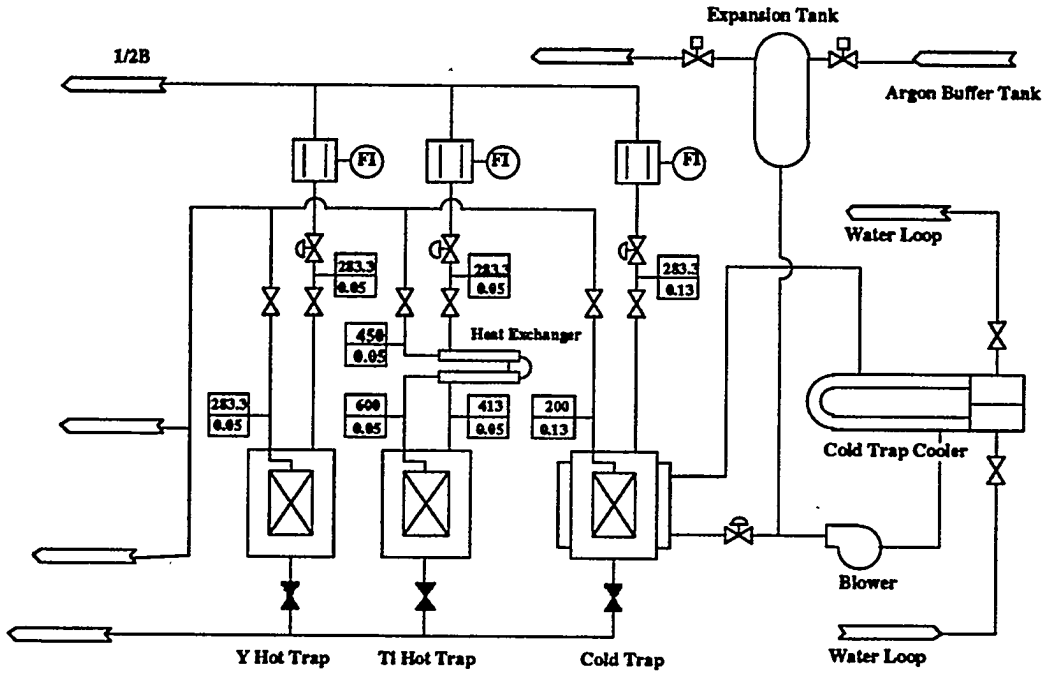

Fig. 2.5.2-9. Lithium purification sub-loop.

2.5.2.3.3 Impurity Monitoring Loop

The impurity monitoring system is shown in Fig. 2.5.2-10. A system of valves permits sampling of the lithium side stream either on entry or exit of the purification system. Both on-line and off-line monitoring of the impurities in the lithium are performed. The off-line system provides for simple removal of a sample of the lithium into a shielded container for chemical analysis in the remote handling facility. The disadvantage of this system, in addition to requiring remote chemical analysis, is the delay in the availability of the results. The on-line system[11,12,13], in contrast, provides results in real time, and can be used to perform a safety function (e.g., air in-leakage or HX tube failure). This system will, at a minimum, contain a hydrogen membrane diffusion meter, and a resistivity monitor. The latter provides primarily an indirect measurement of the nitrogen concentration. Nitrogen and oxygen meters may also be added if development of these is successful. Preliminary design provides complete interchangeability of all of the impurity meters. Complete redundancy of the impurity monitoring loop will permit continued operation in the event of a component failure. Replacement of the failed component will be performed during the next scheduled or unscheduled maintenance.

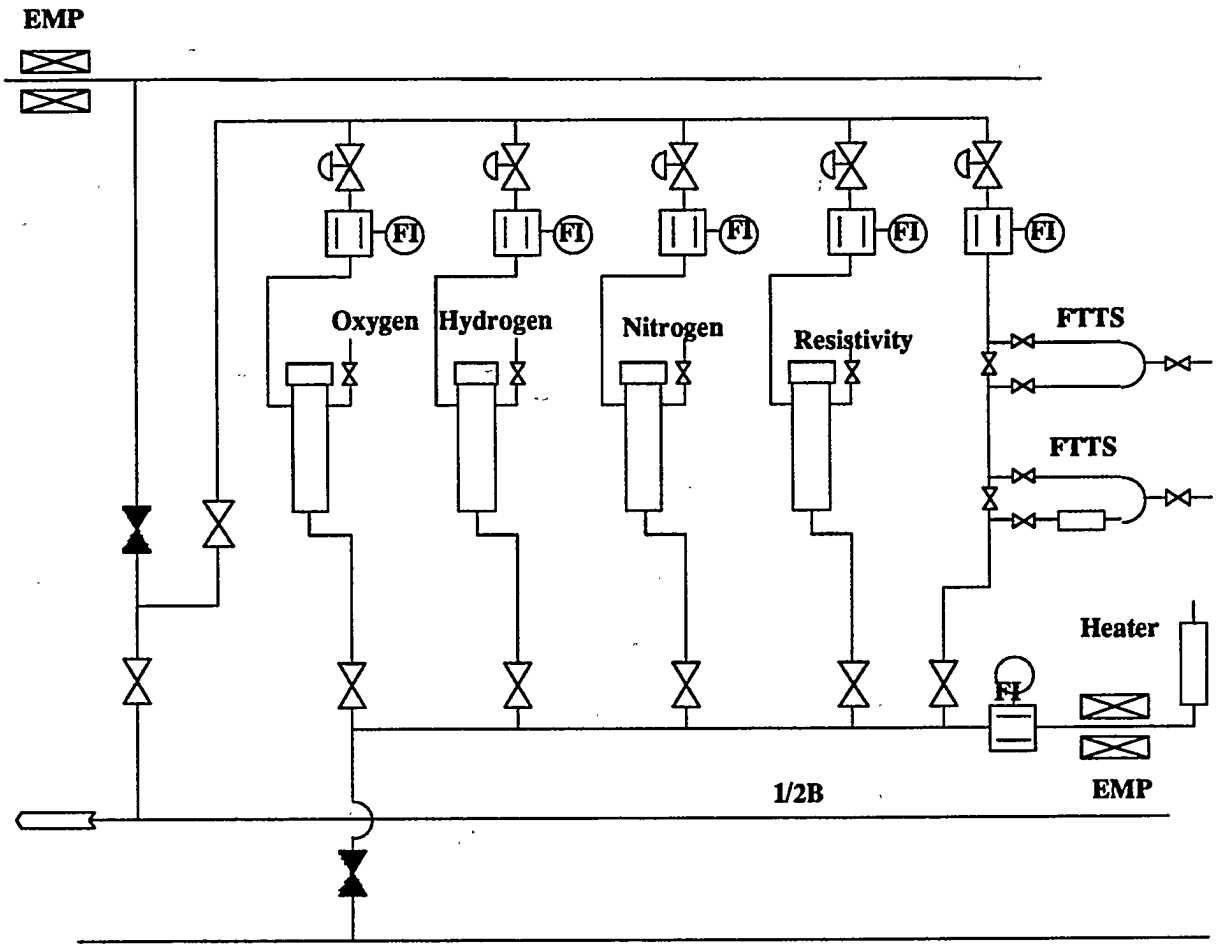

Fig. 2.5.2-10. Lithium loop impurity monitoring sub-loop.

2.5.3 Interfaces

This section includes following interfaces :

- Target Facility - Accelerator Facility
- Target Facility - Test Cell Facility
- Target Facility - Conventional Facilities.

2.5.3.1 Target - Accelerator Interface

In the current IFMIF planning, two targets with a common lithium loop will be constructed in the initial stage. In this stage, only one target is operated at any time with a total heat load of 10 MW (40-MeV deuteron energy).

In future expansion, two additional beam lines of 125-mA each would be added. The two targets could then be operated simultaneously, with up to two beam lines (250 mA) per target. The target-accelerator must take this future expansion into account in the design layout.

The gate valves, which are installed at a point about 4 m from the outside surface of the target /Test Cell shielding wall, define the boundary between the target and accelerator.

Within this 4-m region, an evacuation system to maintain the low pressure of 10^{-4} Pa at the gate valve is installed for each of the beam lines. The diameter of the evacuation tubes will be about 20 cm. A lithium vapor/mist trapper and a turbo molecular pump (pumping rate about 5000 L/s) are connected in series to each evacuation tube. These turbo molecular pumps will be set up on the under floor and their outlet will be connected to the building's evacuation system which is able to treat the tritium containing gas. Two horizontal beam lines of the upgrade will be initially plugged and welded closed by shielding material.

2.5.3.2 Target -Test Cell interface

There are two interface issues. The first one is gas-tight seals to maintain the Test Cell pressure to as low as 10^{-1} Pa for the target with a backwall, and 10^{-3} Pa for the free jet target. The target assembly has three components which penetrate the Test Cell vacuum boundary. Two of these are the lithium inlet and outlet of the target assembly, and the third is the end of the beam transport tube. These components will be subjected to the thermal cycling effect during startup and shutdown operations so the flexible seals method will have to be applied. In addition, seals around the edges of the replaceable backwall is needed to maintain different vacuum requirements in the target chamber and Test Cell.

The second issue is that of a remote handling system for the target assembly. Replacement of the target assembly or the back plate is performed by this system from the upper side of the Test Cell. The required open space of the Test Cell upper shield for the operation of this system is about 2 m x 2 m. This remote handling procedure requires first the removal of the test assemblies. These two issues are illustrated in Fig. 2.5.3.-1

2.5.3.3 Target - Conventional Facilities interface

The two interface issues are to be included in practical design. The first one is the remote handling system to replace or repair the hot traps and cold traps. The tritium trap will be replaced periodically depending upon the allowable tritium inventory. The time for replacement is now TBD. A cold trap that accumulates the Be^{-7} is also repaired by the remote handling system because of its strong gamma rays of 0.48 MeV ($T_{1/2}$ = 53 d). It is now anticipated that the remote handling system will be used to remove the trap for regeneration or repair in a hot cell facility.

The second is the issue of tritium evacuation interface. The outlet of the vacuum pumps that are installed for the evacuation of Target - HEBT interface, quench tank, surge tank and drain tank is to be connected to the gas evacuation system of the building. The system is operated to control the level of tritium discharge from the building.

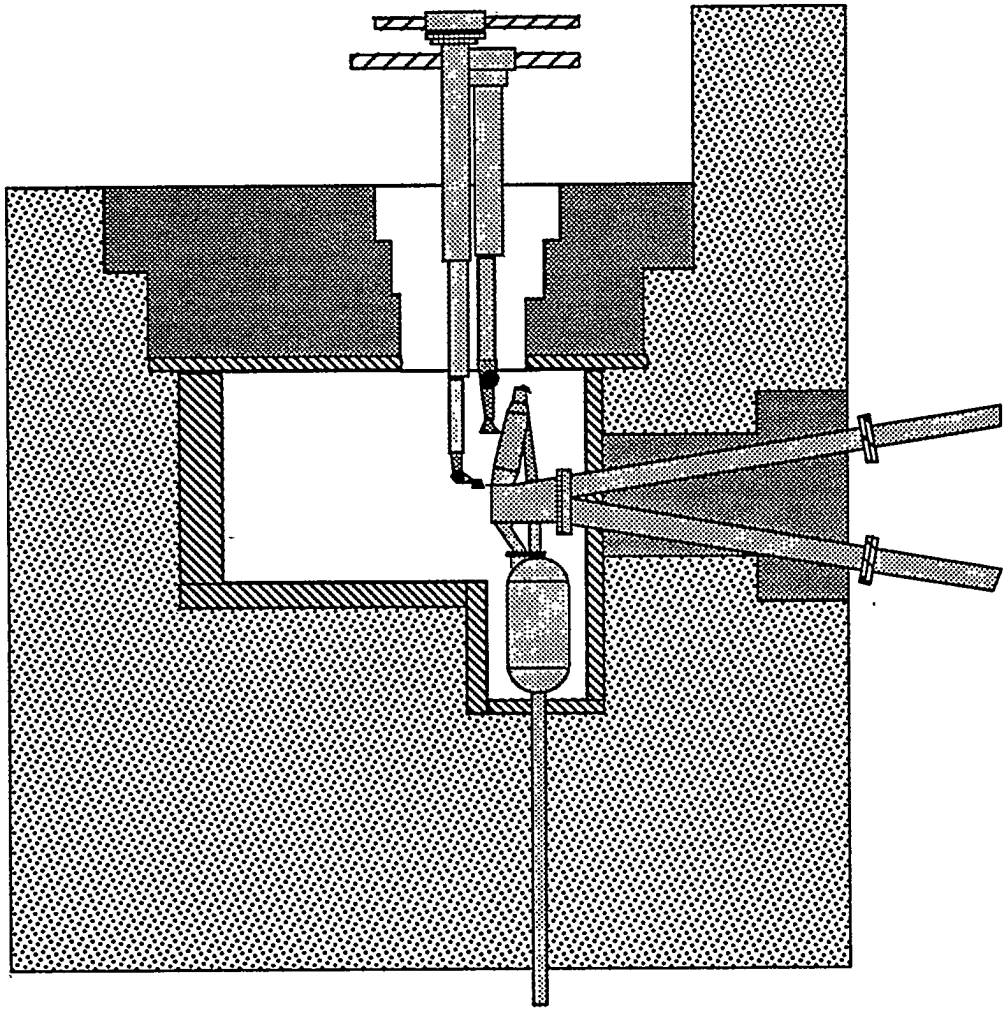

Fig. 2.5.3-1. Manipulator system inside Test Cell.

2.5.4 Safety Considerations

2.5.4.1 Safety Analysis Technique

A preliminary Failure Mode and Effect Analysis (FMEA) for the target facility and related areas has been prepared. This approach was found to be the most appropriate to provide the safety-related information and consideration in this early design phase because it can be extended to include more detailed analysis in the later phases of the project.

2.5.4.2 Tabulation

Table 2.5.4-1 provides the FMEA factor descriptions. No quantitative analysis is made, and only possible causes and effects of off-normal events are identified and evaluated.

Table 2.5.4-1. FMEA factors

Ease of Detection		
A	Easy	Immediately detected and alarmed
B	Limited	Detected with delay or needs observation
C	Difficult	No detection available
Frequency of Occurrence		
A	Operational events	More than once per year
B	Likely events	1/year ~ 10^{-2}/year
C	Unlikely events	10^{-2}~10^{-4}/year
D	Extremely unlikely events	Less than 10^{-4}/year
Risk Potential		
I	Normal	Operational caution required
II	Danger	Limited function
III	Minor hazard	Immediate halt and repair
IV	Major hazard	Accident, damage of facility
V	Extreme	Possible environmental effect

2.5.4.3 Failure Modes And Effects Analysis for IFMIF Target System.

(1) Li loop

COMPONENT	PURPOSE	FAILURE MODE	EFFECT	DETECTION	MITIGATION OR PREVENTION	FREQ.	RISK
EMP	Circulate Liquid Lithium	Process Leak	Lithium in Secondary Containment	B. Pressure Flow	Leak Check	C	IV
		Stop	Lost target Flow	A. Pressure Flow	Current Check Interlock	D	V
		Insufficient Flow	Low target Flow	A. Current Flow	Periodical Check,	C	IV
Li Plumbing	Circulate Liquid Lithium	Process Leak	Lithium in Secondary Containment	B. Pressure Flow	Leak Check	C	IV
			Lithium in Air	B. Pressure Flow	Detect Minor Leak	D	V
		Plugging	Lost Target flow	A. Pressure Flow	Impurity Control	D	V
Heat Exchanger	Remove Beam Heat	Internal Leak	Lithium in Oil Possible Rad Release	B. Pressure	Alarm, Interlock	C	IV
		Stopped Oil	Loss of Cooling	A.Tempera-ture	Alarm, Interlock	C	III
		Oil Leak	Minor Contamina-tion	B. Pressure	Leak Check	B	III

Cold Trap Hot Trap	Impurity Control	Plugging Malfunction Breakthrough	Loss of Flow Impurity in Li Possible Mail Loop Plug	A. Flow B. Plugging Meter	Monitor Dp Impurity Monitor	B C	III IV

(2). Target Assembly

Li	Absorb Beam Power	Minor Instability Major Instability Excess Evaporation	Excess Backwall Heat Excess Backwall Heat Li in Beam Line	B. Flow Monitor? B. Flow Monitor? A. Pressure or Vacuum	Interlock Interlock Interlock	A B A	IV IV III
Back Wall	Form Li Film	Swelling Rupture	Improper Li Film Li in Test Cell	C. ?? B. ??	Replacement Replacement Interlock	A C	III IV
Target Chamber	Maintain Vacuum	Poor Vacuum Failure in Exhaust Process	Li in Beam Line Possible Radiation Release	A. Pressure of Vacuum A. Rad Monitor	Interlock Interlock	A B	III IV V

2.5.4.4 Results And Findings

2.5.4.4.1 Lithium loop hazard

The most important event to be considered is a major leak of the liquid lithium and the resulting fire. Although the probability is very low, and the system will be designed with highest priority to prevent such an event. The largest impact is related to the release of radioactive materials to the environment. A significant amount of the radioactivity in the target system could be in an airborne form such as lithium aerosol. From this aspect, minimization of the lithium inventory is essential, because lithium is the only medium of the mobile hazardous material, and the amount of hazardous materials can only be controlled by their concentration in lithium. Propagation of the event to the accelerator or Test Cell region is of major concern, and thus isolation between these subsystems should be considered in the design. Containment of the lithium loop and its major components have a significant impact on the potential safety of the lithium system. This task is not difficult, thus a lithium fire is not a serious issue.

2.5.4.4.2 Target stability and backwall

Minor instability of the lithium flow is identified as frequent and potentially serious. Instabilities that generate thinning in the liquid jet and a sudden stop in loop flow are possible, and the overall probability of such an event cannot be estimated at this time. The risk and hazard of this event should be considered in conjunction with the thermal resistance of the back wall and the response of the interlock that should stop the beam. The result of the exposure of backwall to the beam is anticipated to be catastrophic and typical time constant of the phenomena when a material is exposed to 100 kW/cm^2 of power is in the range of milliseconds. It is strongly recommended that the reliability and tolerance of the back wall be increased to the maximum level to obtain adequate response time for the interlock; however, the speed of the detection of an off-normal event on target is uncertain. From a safety point of view, isolation of the target from the beam line is difficult, and this

effect should be considered in these subsystems. The target and Test Cell should be designed to be tolerant of such an event.

2.5.4.4.3 Confinement of radioactivity

Mobile radioactive nuclides, particularly tritium are a major hazard for the environment in the case of an accident. Site inventory of tritium is usually a good measure; however, in the lithium target system, the mobility of tritium could be an important factor. Tritium trapped and immobilized on some solid media may need a different consideration.

Multiple confinement of tritium and other movable nuclides should be considered in the entire IFMIF system. In particular, the vacuum exhaust that is anticipated to contain a relatively high level of activity will need careful designing to be acceptable for any of the possible IFMIF sites. In off-normal events, isolation of primary subsystems of beam, target and Test Cell is not reliably achieved. Proper choice of Test Cell environment to prevent or mitigate backwall rupture is needed. Also, if needed, tertiary confinement should be considered for inert cover gases for target and Test Cell.

Contamination and radiation control in the beam line is currently unknown. It is suggested that the accelerator design assess possible radiological hazards in both normal and accident conditions.

2.5.4.4.4 Activation

Activation of the construction materials, equipments and solid materials in the IFMIF system induced by the scattered neutrons is not a hazard in the FMEA, because they are not specific to accidents. However, very high activity around the lithium target limits the access of workers for an emergency operation, quick repair, and any other efforts to minimize the damage in the accidents. Interlock, remote handling, and fail-safe design are extremely important.

Although the effects of neutrons that stray or are back-scattered are not estimated in the target system, activation and tritium production by these neutrons may not be negligible.

2.5.4.4.5 Beryllium

The chemical hazard of beryllium is expected to be negligible when compared to the hazard resulting from a leak of lithium. However, in the leaked lithium, the gamma activity of beryllium could possibly pose a significant hazard to personnel[8,9,10].

2.5.4.4.6 Beam line interface

Some of the events result in excess evaporation of lithium that would diffuse to the beam line vacuum. An acute effect is a poor vacuum that can be handled by pumps. Differential pumping will be effective to maintain a sufficient vacuum in the beam line. However, no known pump can handle a considerable amount of lithium vapor. Accumulation of lithium in a downstream beam line may cause contamination and problems such as fire and chemical hazards in maintenance that requires exposure to air. Here, the need for a vacuum pump that can handle lithium vapor and tritium is identified as a major technical issue.

2.5.4.5 Recommendations

It is generally concluded that the IFMIF target system is technically feasible in the near future. However, some of the component design and operating techniques require development to assure safe and acceptable performance. As considered above, for instance, confinement and potential hazard of radioactivity is a major concern. In general, various technologies required for IFMIF as a nuclear facility are in the very early stage. Some from fast breeder reactor technology will be applicable, but handling of the tritium, vacuum, a high-energy beam and lithium are rather new. Effects that propagate from target to other subsystems are not considered here, but seem important.

2.5.5 RAM Considerations

The lithium target system and its components shall be designed to minimize the system downtime and to assure minimum availability of 95% during normal operation. This level is required by the consideration of the overall availability budget for the IFMIF facility. The desired level of availability shall be achieved by first performing extensive design verification through testing and analyses on critical hardware and software. Redundancy shall be implemented where required and practical. Equipment that is expected to require replacement shall be designed for ease of maintainability. Diagnostics shall be provided to monitor the health of the system.

Failure modes relevant to the lithium system can be divided into three categories: leak events, rupture events, and failure-to-operate events. Depending on the frequency of occurrence, the failures will be categorized as routine, rare, and once in a lifetime. Events can further be categorized according to the severity of their impact on the facility as low impact, off-normal, and major. The goal of the design shall be to achieve an alignment of these two categories so that the major failure events will be expected to occur once in a lifetime or less frequently.

2.5.5.1 Reliability

Detailed analysis of expected probability of leaks and ruptures was performed for the lithium target system during the FMIT detailed design effort[14]. The data obtained through extensive tests and analyses show that, except for LHX tube leaks, the number of repairs to be expected for leak or rupture is essentially zero for the 40-year plant lifetime. The IFMIF reliability analysis uses failure rates for major components based on the above reference where applicable in conjunction with estimates based on more recent experience. Table 2.5.5-1 summarizes the failure rates for major elements of the system.

Table 2.5.5-1. Failure rates (per hour) for major lithium target components

Component	Leak	Rupture	Failure-To-Operate
Target Assembly	3.9×10^{-6}	10^{-9}	N/A
Quench Tank	2×10^{-7}	10^{-9}	N/A
Lithium Dump Tank	2×10^{-7}	10^{-9}	N/A
Main EMP	2×10^{-7}	2×10^{-9}	1.4×10^{-5}
Valves	10^{-7}	10^{-8}	2.9×10^{-6}/Valve
Surge Tank	2×10^{-7}	10^{-9}	N/A
Evacuation System	N/A	N/A	3.3×10^{-5}
Li/Org. Heat Exch.	2.9×10^{-6}	10^{-9}	N/A
Org. Cool. Dump Tank	2×10^{-7}	10^{-9}	N/A
Sub-EMP	2×10^{-7}	2×10^{-9}	1.4×10^{-5}
Cold Trap	2×10^{-7}	10^{-9}	10^{-5}
Hot Trap	2×10^{-7}	10^{-9}	10^{-5}
Trace Heaters	N/A	N/A	1.5×10^{-4}
Thermocouples	N/A	N/A	1.5×10^{-4}
Press. Sensors	N/A	N/A	2×10^{-4}

The expected number of failures over the 40-year life of the facility can be estimated by multiplying the above failure rates by 350,000, the number of hours in 40 years. The result shows that for a number of components, including the target assembly, the main EMP, the lithium valves, the evacuation system, the cold trap, the hot trap, the trace heaters, the thermocouples, and the pressure sensors, the number of repairs to be expected for leak or rupture is close to one for the 40-year plant lifetime. Therefore, redundancies and maintenance capability shall be provided to deal with repairs of these subsystems. Redundant cold and hot traps are used. Multiple redundancies, as discussed below, are provided for trace

heaters, thermocouples, and pressure sensors. Where redundancies are not possible, capabilities for quick-maintenance or replacement are provided. For example, the most serious of the electromagnetic pump fail-to-operate (FTO) events included above are the electrical failures of the pump stator. Special quick maintenance design with an option for remote replacement of failed stator segments is being considered. Similarly, the target assembly is being designed for quick replacement. The evacuation system, despite its relatively high failure rate, does not represent a problem, because of easy access and because its repairs can be done in a short time.

2.5.5.2 Availability

The target system availability shall exceed 95% during the lifetime of the plant. Because of access difficulties in many areas of the lithium system, the impact of the failures in the lithium system has the potential to significantly affect the availability in the given year in which a major failure, involving a lithium spill, occurs. Hence, the above availability shall be the design objective over the lifetime of the facility. Even though such major failures are not expected to occur during the lifetime of the facility, the design shall take into account the access difficulties and the associated long potential recovery time and provide accommodations for minimizing the consequences of such events.

Using information from Table 2.5.5-1, an availability model was assembled for the proposed IFMIF lithium target system. Mean time between failures (MTBF) and mean time to repair (MTTR) data employed in the analyses are summarized in Table 2.5.5-2. The MTBF values correspond to the failure mode with the highest failure rate in Table 2.5.5-1. MTTR values are based on engineering judgment.

Table 2.5.5-2 Availability Data for Major Lithium Target Components

Component	MTBF (h)	MTTR (h)
Target Assembly	2.6×10^5	336
Quench Tank	5×10^6	8760
Lithium Dump Tank	5×10^6	8760
Main EMP	7.15×10^4	336
Valves	3.5×10^5	336
Surge Tank	5×10^6	8760
Evacuation System	3×10^4	168
Li/Org. Heat Exch.	3.5×10^5	336
Org. Cool. Dump Tank	5×10^6	336
Sub-EMP	7.15×10^4	168
Cold Trap	10^5	168
Hot Trap	10^5	168

As an example, the RAM model of the impurity removal loop is shown in Fig. 2.5.5-1 below. The AND gates" indicate serial availability dependence and the OR gates indicate redundancy. Similar models were developed for all the other subsystems of the Target Facility. The availability analysis predicts 95.1% availability for the IFMIF Target Facility, well above the required goal of 95%.

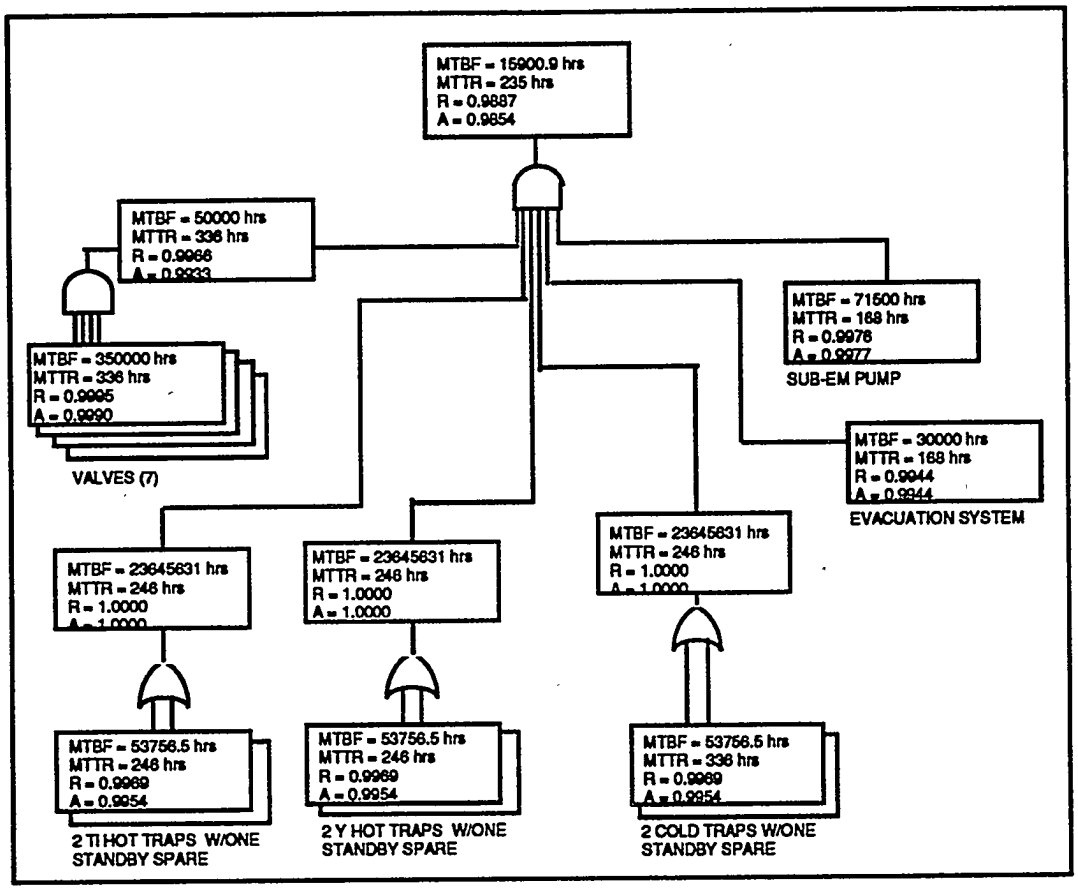

Fig. 2.5.5-1. Ram model of the lithium impurity removal loop.

Table 2.5.5-3 below summarizes the availability and reliability results for the Target Facility. The individual MTBF and MTTR values (in hours) used for every component are shown. Also indicated is the number of components, number of spares (if any), type of redundancy (number 1 indicates a hot, or operational redundancy, while number 2, indicates a cold, or standby redundancy), annual number of replacements, average amount of time spent annually for repairs, availability, and reliability over a period of one week (168 hours).

Table 2.5.5-3. Summary of the availability and reliability calculations for the Target Facility.

System	Sub system	Assembly	Equip't	MTBF (h)	MTTR (h)	No. of Eq. per Leg	No. of Spares Included	Redundancy Type	Annual Replacements	Annual Repair Time (h)	Steady State Availability	Reliability for mission time
Main loop												
Primary loop												
		Target assembly		259,200	336	2	0	0	0.1	23	0.9974	0.9987
		Quench tank		5,000,000	8,760	2	0	0	0.0	31	0.9965	0.9999
		Lithium dump tank		5,000,000	8,760	1	0	0	0.0	15	0.9983	1.0000
		Main EM pump		71,500	336	1	0	0	0.1	41	0.9953	0.9977
		Valves		350,000	336	7	0	0	0.2	59	0.9933	0.9966
		Surge tank		5,000,000	8,760	1	0	0	0.0	15	0.9983	1.0000
		Evacuation system		30,000	168	1	0	0	0.3	49	0.9944	0.9944
		Lithium-organic hx		350,000	336	1	0	0	0.0	8	0.9990	0.9995
Total primary loop				12,551	350				0.7	242	0.9728	0.9869
Organic loop												
		Organic coolant dump tank		5,000,000	336	1	0	0	0.0	1	0.9999	1.0000
		Organic pump		350,000	5	1	0	0	0.0	0	1.0000	0.9995
		Expansion pot		5,000,000	336	1	0	0	0.0	1	0.9999	1.0000
		Organic-water hx		350,000	336	1	0	0	0.0	8	0.9990	0.9995
		Valves		350,000	336	6	0	0	0.2	50	0.9943	0.9971
Total organic loop				42,870	295				0.2	60	0.9932	0.9961
Water loop												
		Water pump		350,000	4	1	0	0	0.0	0	1.0000	0.9995
		Valves		350,000	4	4	0	0	0.1	0	1.0000	0.9981
		Cooling tower		259,200	336	1	0	0	0.0	11	0.9987	0.9994
Total water loop				55,112	75				0.2	12	0.9986	0.9970
Total main loop				8189	298				1.1	314	0.9649	0.9800
Impurity removal loop												
		Sub-EM pump		71,500	168	1	0	0	0.1	21	0.9977	0.9977
		Valves		350,000	336	7	0	0	0.2	59	0.9933	0.9966
		Evacuation system		30,000	168	1	0	0	0.3	49	0.9944	0.9944
		Cold trap assembly										
			Cold trap	100,000	168	1	0	0	0.1	15	0.9983	0.9983
			Valves	350,000	336	3	0	0	0.1	25	0.9971	0.9986
		Total cold trap assembly		53,756	246				0.2	40	0.9955	0.9969
		2 cold trap assemblies w/redundancy		23,645,631	246	2	1	2	0.3	80	1.0000	1.0000
		Y hot trap assembly										

Y hot trap	100,000	168	1	0	0	0.1	15	0.9983	0.9983
Valves	350,000	336	3	0	0	0.1	25	0.9971	0.9986
Total y hot trap assembly	53,756	246				0.2	40	0.9955	0.9969
2 y hot trap assemblies w/redundancy	23,645,631	246	2	1	2	0.3	80	1.0000	1.0000
Ti hot trap assembly									
Ti hot trap	100,000	168	1	0	0	0.1	15	0.9983	0.9983
Valves	350,000	336	3	0	0	0.1	25	0.9971	0.9986
Total ti hot trap assembly	53,756	246				0.2	40	0.9955	0.9969
2 Ti hot trap ass. w/redundancy	23,645,631	246	2	1	2	0.3	80	1.0000	1.0000
Total impurity removal loop	15901	235				1.6	368	0.9854	0.9887
Total IFMIF Target Facility	5034	260				2.6	682	0.9508	0.9690
Lithium Target System Availability Goal (Minimum)								0.9500	

During the detailed IFMIF design phase, each component of the lithium target system shall be given individual attention to assure that the above availability goals are met. The following sections discuss the availability considerations for the most important subsystems in more detail.

2.5.5.2.1 In-vault instrumentation

Failure rates of in-vault instrumentation (thermocouples and pressure sensors) are high enough to necessitate replacement during the lifetime of the facility. Because the high radiation background in the vault, no entry is possible for routine repairs. Consequently, redundant instrumentation shall be provided.

Thermocouples are used to trace heat control as well as to obtain system operating data. In order to maintain operation over the plant life, each trace heat zone shall be equipped with a thermocouple (and wire) for normal use plus a redundant thermocouple (and wire). The same philosophy shall be applied to trace heaters. As an additional backup, the set point of a single heater may be increased from normal 230°C to 245°C or even 275°C and the resulting thermal distribution shall be able to compensate even for the failure of one of the redundant trace heaters.

2.5.5.2.2 Electromagnetic pump (EMP)

EMP FTO events could be caused by a fault in the electrical power supply or control systems or on the pump motor. Direct hands-on maintenance capability shall be available for all FTOs except the ones involving the pump itself. A high dose rate present in the EMP cells because of the presence of Be-7 in the lithium, requires remote maintenance capability for diagnosis and repair.

Because of the high speed lithium flow, corrosion/erosion of the pump duct is a concern. A pinhole leak in the pump duct could be postulated as a possible event. If the hole propagates instead of being self-sealing, lithium could leak into the stator, react with electrical insulation and dissolve some of the copper coils. Such a spill is, however, considered to be confined within the outer case of the pump. To facilitate the recovery from the highly remote possibility of lithium being leaked into the cell, the cubicle shall be equipped with a spill pan backed up by a floor liner. The design shall account for the postulated lithium leak in the EMP cubicle. Potential pathways to occupied areas shall be sealed to limit the spread of the contamination, and to prevent formation of anoxic conditions in those areas of the plant. The lithium vault areas shall be held by the HVAC at a lower pressure than occupied areas, to insure confinement of the airborne products.

The areas surrounding the lithium vault and cubicles shall provide the access required for the recovery operation. Each cubicle shall be equipped to permit insertion of manipulators and the necessary support services through removable plugs once the spill

conditions have been stabilized. Monitoring of recovery operations shall be accomplished via closed circuit TV.

A detailed description of the results of testing at the Hanford Engineering Development Laboratory (HEDL) and calculations of the amount of lithium plated out on the cubicle walls. as well as the resulting gamma field dose rate from the plated out material are presented in ref. 14.

A worst case scenario in which a portion of the spill finds its way to the cubicle catch pan and ignition occurs, requires a replacement of the failed EMP. It has been estimated in ref. 14 the manpower requirements to perform specific maintenance tasks and personnel exposure during performance of the task. The total elapsed time calculated for the task of EMP replacement was about 51 d. The work has been planned out in such a way that average integrated exposure levels for the personnel involved in the repairs is within allowable limits.

2.5.5.2.3 Lithium heat exchanger (LHX)

The quantities of the organic liquid that can be postulated to leak from the LHX tube joints while in service are small and will be caught and retained in the pan located under the head. The vapors which shall evolve from any organic spilled in the pan shall be carried away by the high ventilation rate within the LHX vault.

Repair of an LHX leak shall be accomplished with tube plugging by means of an explosive plug system under remote control.

2.5.5.2.4 Lithium valves

To protect against a lithium valve failure, all valves shall be actuated from accessible support areas using extension drive mechanisms. The valve drive mechanisms shall be maintained on a hands-on basis from the lithium system support areas during planned outages. For removal of a valve if it fails to seat properly because of seat distortion, a remote maintenance capability shall be provided.

A postulated lithium valve leak, such as in the bellows, shall be accommodated by locating the valve in a separate enclosure that can be decontaminated, has removable catch pans, and is equipped to provide argon flood capability.

2.5.5.2.5 Lithium impurities removal system - hot and cold traps

The hot and cold traps can fail to either operate satisfactorily or develop a leak. In order to control the extent and direction of leaks, the hot and cold traps shall be installed in shrouds. Argon gas shall be introduced into the annulus between the vessels and the shrouds. The stems of the valves in the impurities removal system shall be contained in an outer housing to trap a potential lithium leak inside. Similarly, the electromagnetic pump in the impurities removal loop shall be protected with an outer casing.

Redundant hot and cold traps configurations are being considered to accommodate the FTO mode of failures.

2.5.5.2.6 Lithium characterization system

The lithium characterization system shall be located at the highest physical elevation of the lithium system. It shall be entirely enclosed in a separately shielded cell equipped with viewing systems, etc. The system shall be composed of 1 in. or smaller piping, remote manual valves, on-line monitoring system, and a flow-through sampler. The component with greatest potential safety concern is the flow-through sampler, where a leak of a mechanical connector can be postulated. A small, weeping leak would be of little consequence. A larger leak shall trigger an alarm system, prompting the operators to shut off the lithium flow and initiate the argon purge.

2.5.5.3 Maintainability

Normal maintenance shall be performed on the lithium system and in the surrounding support areas during scheduled outages as part of the periodic maintenance program. Repairs of noncritical elements such as lighting shall also be performed during scheduled outages. Repair time as short as practicable, or component redundancy, shall be the design objective for system elements that have a reasonable expectation of becoming dysfunctional several times within the lifetime of the plant.

The maintenance and repair activity require access. Zoning and shielding design shall allow access to the lithium monitoring loop with the beam on. The requirements for access to other lithium support areas will require either draining the lithium from the system into the dump tank or, as a less desirable option, waiting for an appropriate period after beam shutdown to permit radioactive decay processes to reduce the gamma source of the Be-7 and/or Na-24 contaminant. Local, movable shielding shall permit limited hands on maintenance of loop components following beam shutdown and lithium dumping.

The normal maintenance tasks to be performed in the lithium system support areas include:

- periodic maintenance of electric actuators for large lithium valves (actuators shall be located external to lithium valve locations),
- periodic maintenance of oxygen and area radiation monitors,
- inspection and periodic maintenance of fire protection equipment,
- replacement of lighting , and
- repair of public address system and public access telephone system.

There are four craft/skill groups that shall require routine access to the lithium system support areas. These are operators, technicians, electricians, and power operators. Operators will routinely walk through the support areas to ensure that all is going well and to check equipment. Technicians will be responsible for operating the lithium monitoring system, Electricians will provide any needed check-out or maintenance on electrical components.

Recovery from off-normal events may be permitted to take a longer time because of less frequent occurrence and less significant impact on facility availability. The success and speed of the infrequent repairs depend on appropriate training of the maintenance personnel. A cold area mock-up and a training program shall be instituted prior to performing each repair task. Since many of the tasks are expected to be performed on an infrequent basis, the mock-up area will probably be put together on an as-required basis and the operators trained each time. Some tasks may only be performed once in an operator's career.

2.5.6 Fabrication, Assembly and Installation

2.5.6.1 General

In this section, only the lithium system completion processes (from fabrication to installation) are described, since the organic and water systems are presumably constructed using the extensive conventional technology experience with chemical and boiler plants. This chapter will also not necessarily cover all the construction work needed to fulfill the plant overall functions. Instead, general concepts on how the system is to be assembled are discussed as a rough guide for construction planning.

It should be noted that more detailed engineering steps will be necessary to identify all of the critical issues associated with the processes from fabrication to installation.

2.5.6.2 Materials

Materials shall be compatible with lithium. At present, considering that operating temperature is around 300°C, austenitic stainless steel (SS-304 or -316) is the structural material of choice. However, special care should be taken in the choice of materials for gaskets, gland seals and the hard facing of valve disks. In particular, copper or aluminum, used as gaskets for flanged connections of high-vacuum system, are incompatible with

lithium. Also, radiation damage must be taken into account for the materials used for those locations exposed to a high neutron dose rate. Corrosion characteristics are inevitably subjected to demonstration tests using a lithium loop.

2.5.6.3 Fabrication

As far as the austenitic stainless steel is concerned, there are no difficulties associated with the process of fabrication except for the special cases of welding, heat treatment, and cleaning as described below.

Welding

All structures should be of butt-welded joints to the maximum extent possible, and welding defects such as excessive weld reinforcement, crevices, and overlapping must be avoided to eliminate corrosion related failures.

Heat Treatment

Solution heat treatment should be applied to the heavy weldments or materials that are subjected to large bending strains; however detailed procedures still require experienced engineering judgment for execution.

Cleaning

Assuming that fabrication should be conducted in a clean environment, the recommended cleaning is by one of the organic solvents. Acid cleaning for restricted areas shall be done very carefully and under severely controlled procedures to avoid adverse effects.

In addition to the issues mentioned above, it should also be kept in mind that the fabrication sequence of the lithium cooler (heat exchanger) must be carefully controlled and supervised. This is because tube-to-tube sheet weldments have a high failure potential, leading to the time-consuming and costly repairs of the heat exchanger.

2.5.6.4 Assembly and Installation

To the maximum extent possible, components such as tanks and heat exchangers should be assembled in the factory as complete units. Piping is, however, partially assembled with fittings to the so-called spool, and then field-welded to another spool or to the component nozzle ends.

Field weld joints are subjected to surface and/or volumetric inspection on-site. After the final installation of the systems, pressure and leak tests are also conducted.

Appurtenances such as insulation, heaters, leak detectors, etc., are fitted after leak testing. Power and electric signal transmission sequence checks and system heat-up tests are conducted prior to lithium filling. The dump tank is then filled from the lithium transfer system and pressurized with argon. Following some additional system checks (i.e., temperature, level, and lithium purity), the dump valve is opened and the loop filled following an approved fill procedure. Flow testings leading to final loop acceptance are then conducted. A pictorial view of a general concept of primary system installation is given in Fig. 2.5.6-1.

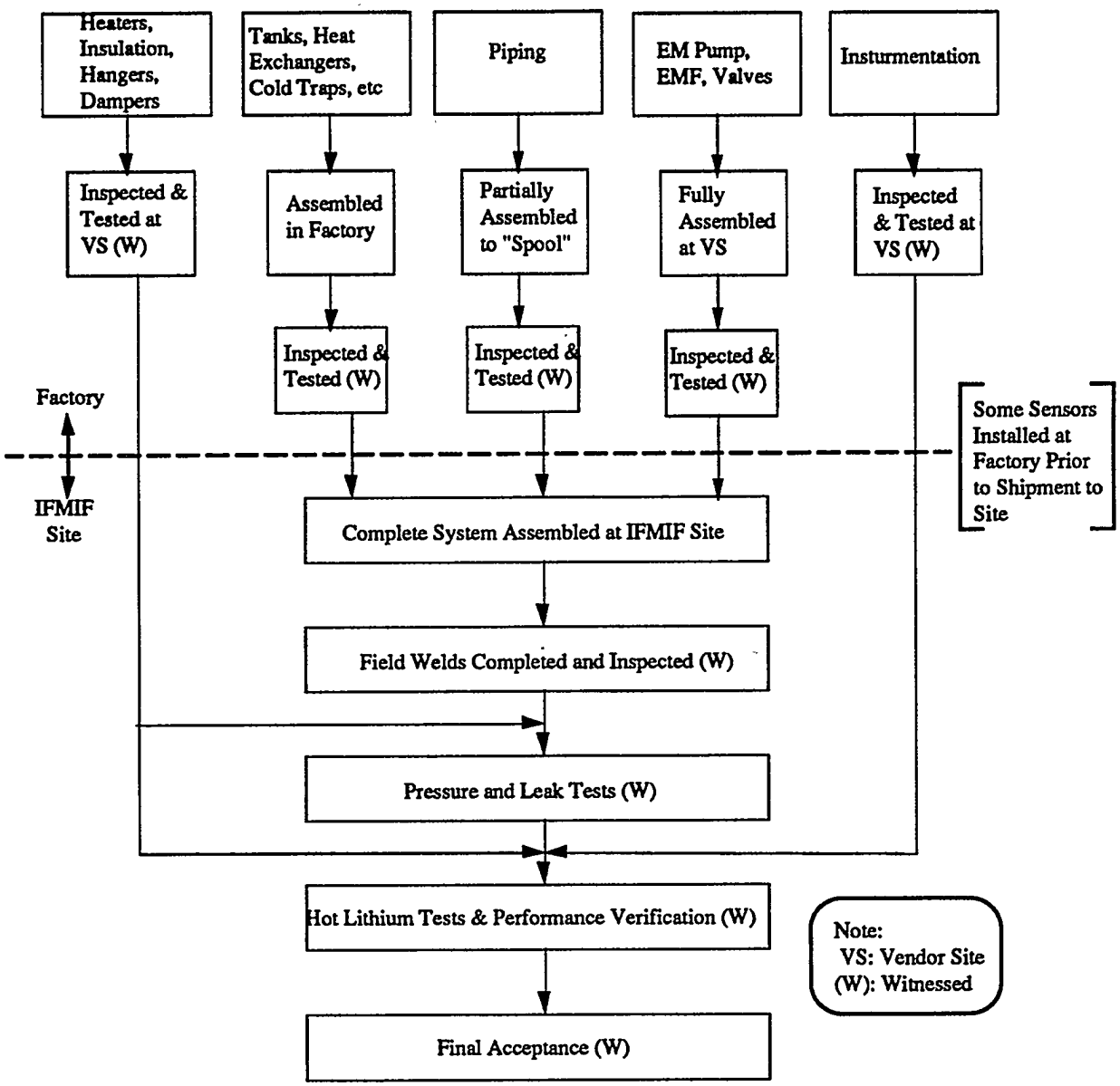

Fig. 2.5.6-1. General concept for primary system fabrication and installation.

2.5.7 Development Requirements

Several development requirements pertaining to the Target Facility are identified. They can be divided into two categories: (1) a target system that consists of development tasks for the target assembly and (2) a lithium loop that requires further development in the impurity monitoring and control areas. No development activities are anticipated for the main lithium loop in the CDA.

2.5.7.1 Target System

2.5.7.1.1 Replaceable Backwall Design

The baseline replaceable backwall target possesses several advantages in a very long target assembly lifetime (up to 20 years), a high facility availability, and a relatively simple remote handling scheme. A key development task is in the design of the replaceable backwall to maximize the smoothness at the transition joints with the target assembly. Replacement and attachment schemes and seals around the edges of the replaceable backwall must be characterized in this development task.

2.5.7.1.2 Target Material Database

Because the backwall is exposed to the most severe neutron damage, it is the most vulnerable component of the target assembly. Because there is no welding of the replaceable backwall to the surrounding structure, it can be made of a different material from that of the target assembly. Candidate backwall materials for the replaceable backwall or the FMIT target include austenitic steel, ferritic steel, and vanadium alloy. Existing data are insufficient to predict reliably the backwall lifetime with high He/dpa ratio and high H-dpa ratio in the backwall temperature range of 250-300°C. In fact, it is IFMIF's primary mission to produce such database, and the initial campaigns will provide valuable data for backwall material assessment. Nevertheless, fission reactor data at up to 60 dpa (equivalent to 1 year of neutron damage in the backwall) and high dpa/He ratio will be very useful in characterizing:

- embrittlement,
- swelling,
- ductile-to-brittle transition temperature,
- irradiation creep, and
- stress-induced crack growth.

2.5.7.1.3 Lithium jet stability

A stable jet is one of the most critical requirements of target performance. During the FMIT study, extensive testing of jet stability in mockup targets were investigated at HEDL. Both water and lithium were used as working fluid. Water tests were conducted in atmosphere and lithium tests were conducted in argon cover gas at high and low pressures.

Similar testing of IFMIF targets will be needed because of larger jet dimensions, different backwall radius of curvature, and possibly a difference in nozzle design. In addition for the replaceable backwall baseline design, flow perturbation arising from the transition between nozzle and backwall must be characterized well . For the free jet target there are limited experimental data in the literature[15,16] but they are for different geometric and flow conditions and different fluid and test atmosphere. While analysis has been performed that predicts a stable jet for IFMIF with or without a backwall, experimental confirmation will be necessary.

It is well known that aerodynamic effect could degrade jet stability particularly at high-flow velocity and that the extent of aerodynamic interactions is proportional to the ambient pressure[15,16]. At low ambient pressure (< 0.1 atm), aerodynamic effects are generally small. Therefore testing of the IFMIF target options should include vacuum or low-pressure environment.

2.5.7.1.4 Jet thermodynamic stability

At the target chamber vacuum condition of 10^{-3} Pa, the lithium saturation temperature is 340°C which is higher than the predicted lithium jet surface temperature but lower than the internal peak temperature. For a target with a backwall, the internal jet pressure increases rapidly to an order of kPa so the lithium temperature will always be below its boiling point. However, in the free jet, the pressure is uniform and its peak temperature exceeds the saturation temperature. While analysis excludes the possibility of nucleate boiling based on

consideration of nucleation requirements and the amount of superheat, confirmatory experiments will be desirable. For any lithium target design, a beam-on-target experiment to verify the jet thermal performance is anticipated during the IFMIF systems preoperational period.

2.5.7.1.5 Test-end instrumentation

The capabilities for in-situ monitoring of beam position on the lithium target and jet stability have not been developed for the IFMIF baseline design. Development activities in this important area are highly recommended. The work done in the test-end instrumentation development for FMIT is described in ref. 17-19.

2.5.7.2 Lithium Loop

The FMIT work and, in particular, the operation of the Experimental Lithium System (ELS)[5,20-22], successfully demonstrated the operation of a large austenitic stainless steel lithium loop operating under vacuum conditions. However, very limited experience was obtained in two areas; impurity trapping and on-line monitoring systems. Additional development was strongly recommended in trap development, especially with the demonstration of an appropriate hot getter material for nitrogen and cold trapping of tritium. The lack of a system for on-line monitoring of nitrogen also greatly limited operating time and experience under vacuum conditions. Of the 16,000 h of ELS operation, only 2000 h were under vacuum, with the remainder under argon atmosphere. The following two development areas are therefore recommended.

2.5.7.2.1 Hot and cold traps

Operation of a small lithium loop to develop and demonstrate the acceptable operation of both hot and cold traps under IFMIF relevant conditions is proposed. The removal of beryllium is especially important, since remote handling scenarios inside of the lithium cell critically depend upon efficient removal of the highly radioactive Be-7 generated in deuteron reactions with the lithium target. The current reference maintenance scenario assumes that local shielding of components will permit limited access to the lithium cell for limited hands-on maintenance of most components. Under these conditions it is anticipated that only the traps will require completely remote maintenance. It is also anticipated that tube leakage in the primary heat exchanger will put carbon into the loop, so trapping of carbon should be demonstrated as well. Extended operation under vacuum conditions, which could result in air in-leakage, also requires acceptable nitrogen trapping.

Trapping of deuterium and tritium by yttrium gettering is simple, the technology is well developed for tritium (hydrogen) control in lithium and sodium, and probably is less expensive than other options. But regeneration is very difficult and the tritium inventory will cause safety concerns.

Cold trapping of tritium from the tritium-containing lithium stream is more complicated, but technically more desirable. Cold trapping of (T+H) from Na has been well developed in industry. The same technology can be applied to lithium, and key demonstration experiments will be needed. The main advantages of cold trapping are its ability to minimize tritium inventory and control tritium concentration to a very low level in the loop.

2.5.7.2.2 Impurity monitoring system

Operation of a small lithium loop to develop and demonstrate acceptable calibration and operation of on-line monitoring systems is recommended. This includes verification testing of a diffusion type meter for hydrogen monitoring, along with a miniature quadrupole mass spectrometer (QPMS) for isotopic analysis. The simultaneous operation of a resistivity meter could also be used to demonstrate that nitrogen impurity levels can be extracted from the resistance and hydrogen data. An effort should also be initiated for a proof-of principle demonstration for an on-line meter for direct nitrogen monitoring. Successful development could have a large payoff in providing a redundant safety system for air in-leakage monitoring.

2.5.8 Summary Of Alternatives

2.5.8.1 Target Design

Three target design options have been under considerations: (1) a modified FMIT-type target with a replaceable backwall, (2) a scale-up version of the original FMIT target, and (3) a free jet target. Each design option imposes a specific Test Cell environment requirement (Sent. 2.5.1.4). In principle, the first two options behave similarly. The advantages and disadvantages of each option has been previously discussed. Although present data are insufficient for a conclusive selection, the replaceable backwall has been proposed for the baseline design because of its many advantages in simple remote handling/maintenance, high availability, and potential long target assembly lifetime. The FMIT and free jet targets are options and along with the baseline target design will be tested during the first phase of IFMIF operation. Each target will be operated for approximately three months. At the conclusion of these early campaigns, a final decision will be made to select a target design that will meet the target lifetime goal of at least nine months and other operating requirements. Testing of each target concept may also be conducted during the IFMIF CDA and EDA to obtain additional necessary information prior to performance verification tests in the first phase of IFMIF operation.

2.5.8.2 Lithium Loops - Electromagnetic Pump

The reference main electromagnetic pump design is a single ALIP with a return duct configuration. This design permits replacement of the stator coils without cutting any of the lithium piping. An alternative to this is the straight-through design, which would require complete pump replacement in the event of pump failure. This is a remote operation, requiring about two weeks. Therefore, for this pump design, it is anticipated that two pumps, valved in parallel, would be placed in the loop. During normal operation, one pump would be idle but could be rapidly valved in if the operating pump failed. The faulty pump would then be replaced during the next scheduled maintenance.

The advantage of the straight-through design is the much lower power requirement. In addition, a great deal of operating data at IFMIF relevant conditions (temperature and flow velocity) on a pump of similar design was obtained on the ELS. The main difference is in the volume flow requirement, which for IFMIF is about twice that of the ELS pump capability. This does not represent a large extrapolation of technology, so that there is a high degree of confidence that the pump could be redesigned and successfully operated.

2.5.9 References

1. J.A. Hassberger, et.al., ""Design of the FMIT Target,"" Ninth Symposium on Engr. Problems of Fusion Research, Chicago, Illinois., Oct. 1981, p 1912.

2. J. A. Hassberger, ""Comparison Between Measured and Predicted Performance of a High Speed, Free Surface Liquid Jet Flowing Along a Curved Wall,"" Nucl. Technol./Fusion 4, 433 (1983).

3. A. Hassanein and D. L. Smith, "Analysis of Beam-on-Target Interaction in a Neutron Source Test Facility," J. Nucl. Mater., 212-215 (1994) 1671.

4. T. Hua, D. Smith, A. Hassanein, and I. Gomes, "Design and Analysis of the Lithium Target System for the International Fusion Materials Irradiation Facility (IFMIF)," presented at the 16th IEEE/NPSS Symposium on Fusion Engineering, Champaign, Illinois, September 1995.

5. R. Kolowith, J. D. Berg, and W. C. Miller, ""Experimental Lithium System Final Report,"" HEDL-TME 84-29, April 1985.

6. G. D. Bazinet, W. F. Brehm, M. G. Downs, and D. K. Matlock, ""Corrosion Behavior of Materials Selected for FMIT Lithium System,"" Nucl. Technol./Fusion, 4, 718 (1983).

7. G. D. Bazinet,""Lithium System Corrosion/Erosion Studies for the FMIT Project,"" HEDL-TME 82-42, April 1983.

8. R. P. Arantatmula, et.al., ""Corrosion of Be-7 in Liquid Lithium,"" J. Nucl. Mater. Vol 85&86, 311 (1979).

9. R. A. Bechtold, ""Deposition and Control of Be-7 in Liquid Lithium,"" HEDL-SA-1889, April 1980.

10. H. Katsuda, et. al., ""Transport of Be-7 in a Lithium Loop,"" Trans. Am. Nucl. Soc. 43, 340, 1980.

11. M. G. Down and G. A. Whitlow, ""Impurity Monitoring and Control in Liquid Lithium,"" Westinghouse Report 79-1B6-ARDL1-P1, March 1979.

12. M. G. Down, ""Impurity Monitoring Meters for Liquid Lithium Systems,"" Proc. Second Int''l Conf. on Liquid Metal Technology in Energy Production, Richland, WA, April 1980.

13. J. Dekeyser, F. Casteels, H. Tas, N. Rumbaut, and M. Soenen, ""On Line Monitoring and Control of Non-Metallic Impurities in Lithium and Sodium,"" Proc. Third Int''l Conf. on Liquid Metal Engineering and Technology, Oxford, England, 1984.

14. "Lithium System Reliability and Maintenance Report. (Formerly Lithium System, Review of Technical Issues)", Hanford Engineering Development Laboratory, Fusion Materials Irradiation Test Facility, 1982, TC-1901

17. 14. J. L. Fuller, N. E. Dixon, and E. M. Sheen, ""FMIT Test End Instrumentation Systems Scoping Study,"" HEDL-TME 81-44, June 1982.

18. J. L. Fuller, ""FMIT Test End Instrumentation Development Bases"FMIT Test-"FMIT Test-,"" HEDL-TME-81-46, June, 1982.

19. J. L. Fuller, ""FMIT Test-End Instrumentation Conceptual Design,""HEDL-TME-84-13, August, 1984.

20. D.L. McCauley, "Startup of the Experimental Lithium System," HEDL-SA-2165, June, 1980.

21. R. Kolowith, K.E. Schwartz, G.E. Meadows, and J.D. Bey, "Development of a Large Lithium Coolant System for Operation Under Vacuum," HEDL-SA-2925, November, 1983.

22. J.M. Atwood, J.D. Berg, R. Kolowith, and W.C. Miller, "Experimental Lithium System Experience," Proc. Third Int'l Conf. on Liquid Metal Engineering and Technology, Oxford, England, 1984.

2.6. ACCELERATOR FACILITIES

This section describes the baseline design concept for the IFMIF accelerators. It includes descriptions of performance requirements, the rf linear accelerator (linac) technologies employed, and their operation and interfaces with other IFMIF systems and facilities. It also discusses accelerator safety, reliability and availability (RAM), and technology development considerations.

The IFMIF accelerators are based upon the utilization of conventional rf linac technologies. The final subsection describes more advanced accelerator technologies that have the potential to provide still higher performance, but are more developmental.

2.6.1 Requirements

The top-level performance requirements are described in Table 2.6.1-1. More detailed discussions of these requirements are provided in the following sections, specifically Sect.s 2.6.2, 2.6.3, 2.6.5 and 2.6.6.

Table 2.6.1-1. Top-Level Performance Requirements For IFMIF Accelerators.

Requirement	Specification	Detail/Comment
Particle type	D^+	H_2^+ for testing (avoids activation) bipolar power supply
Accelerator type	RF Linac	175 MHz operation of 8-MeV RFQ followed by 30-40-MeV 175 MHz DTL
Number of accelerators	2	Parallel operation
Output current	250-mA	Potentially upgradeable to 500-mA by adding more accelerator modules
Beam distribution On target	Rectangular Flat Top	20 cm horizontal x 5 cm vertical
Output energy	30, 35, or 40-MeV	User selectable
Output energy dispersion	± 0.5-MeV FWHM	< 41-MeV max
Duty factor	CW	Pulsed tune-up and start-up
Availability	≥ 88%	During scheduled operation
Maintainability	Hands On	For accelerator components up to final bend in HEBT. Design to include capability for remote maintenance (estimated <15% cost impact)
Design lifetime	40 Years	

2.6.2 Description

2.6.2.1 General arrangement

As shown in Fig. 2.6.2-1 (plan view), the IFMIF requirement for 250-mA of deuteron beam current delivered to the target will be met by two 125-mA, 40-MeV accelerator modules operating in parallel. This technological approach is cautiously aggressive with respect to the current capabilities of rf linac technology and provides operational redundancy by allowing operation to continue at 125-mA when one or the other of the two accelerators is temporarily removed from service for repair. Each 125-mA accelerator is designed with sufficient derating but not with a significant upgrade capability. Additional beam current, if desired, would be provided by adding additional 125-mA modules.

The IFMIF deuteron accelerator, shown in Fig. 2.6.2-2 (elevation view), comprises a sequence of acceleration and beam transport stages. Dual ion sources (operating and standby) generate a CW 140-mA deuteron beam at 100 keV. A low-energy-beam-transport (LEBT) guides the deuteron beam from the operating source to a radio-frequency-quadrupole (RFQ). The RFQ bunches the beam and accelerates 125-mA to 8-MeV. The 8-MeV RFQ beam is injected directly into a room-temperature (RT), ramped-gradient drift-tube-linac (DTL) of the conventional Alvarez type with post couplers, where it is accelerated to 30, 35, or 40-MeV.

The baseline rf power system for the IFMIF accelerator is the existing Eimac 4CM2500KG tetrode (or equivalent), operated at a power level of 1.3 MW and a frequency of 175 MHz. Operation of both the RFQ and the DTL at the same relatively low frequency is a conservative approach for delivering the high current deuteron beam with low beam loss in the accelerator. This will facilitate the achievement of hands-on maintainability without remote manipulators. The use of only one rf frequency also provides some operational simplification as well as commonality of rf power components.

The DTL output beam is directed to either of the targets or to the tune-up beam calibration station by a high-energy-beam-transport (HEBT) that also provides the desired target spot distribution tailoring and energy dispersion.

Extensive trade-off studies have been conducted on this baseline design, using the Accelerator System Model (ASM). ASM is a new code developed by a U.S. collaboration that allows consideration of physics, engineering, cost, and RAM information in a consistent framework for the first time.

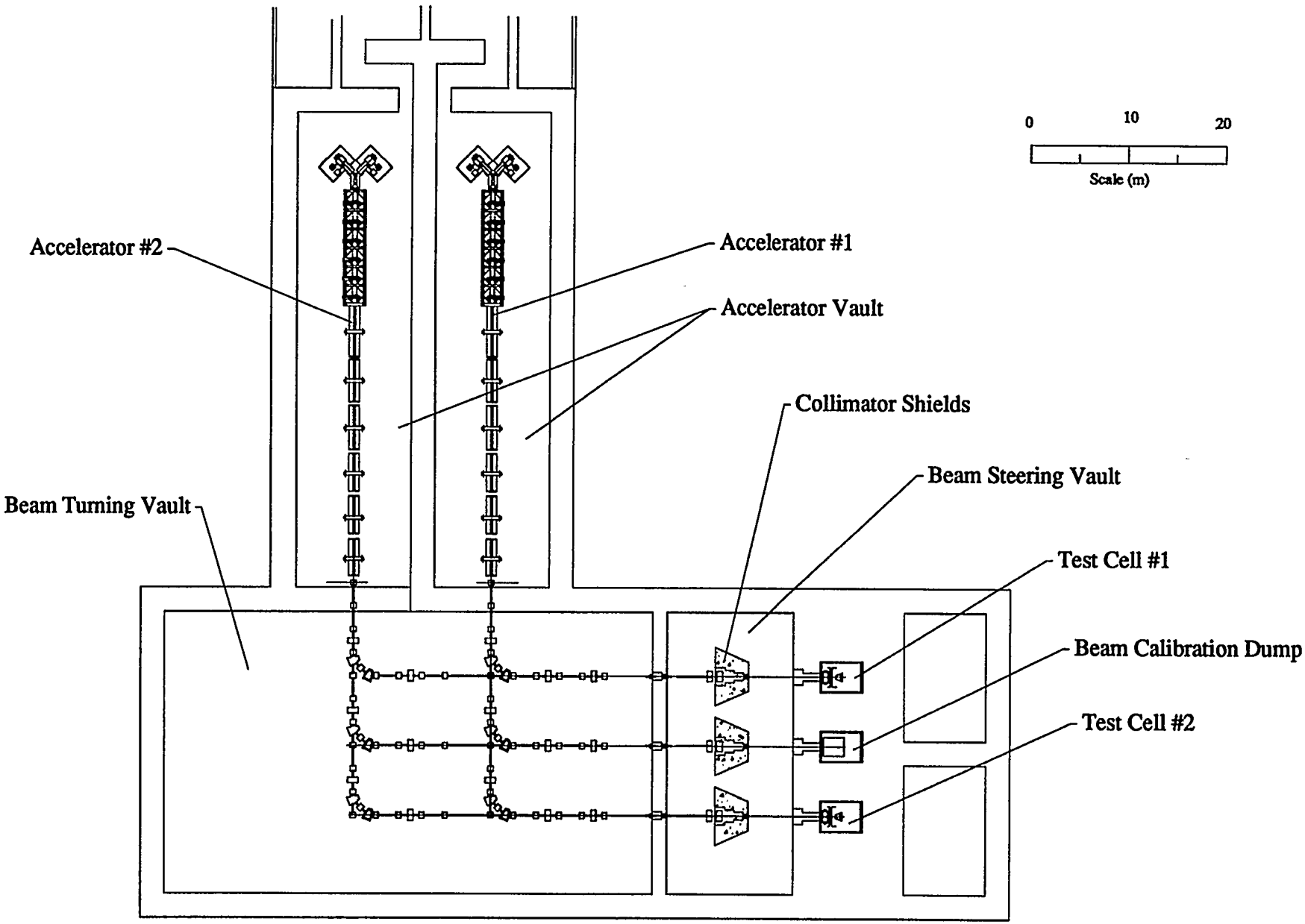

Fig. 2.6.2-1. IFMIF accelerator general arrangement (plan view).

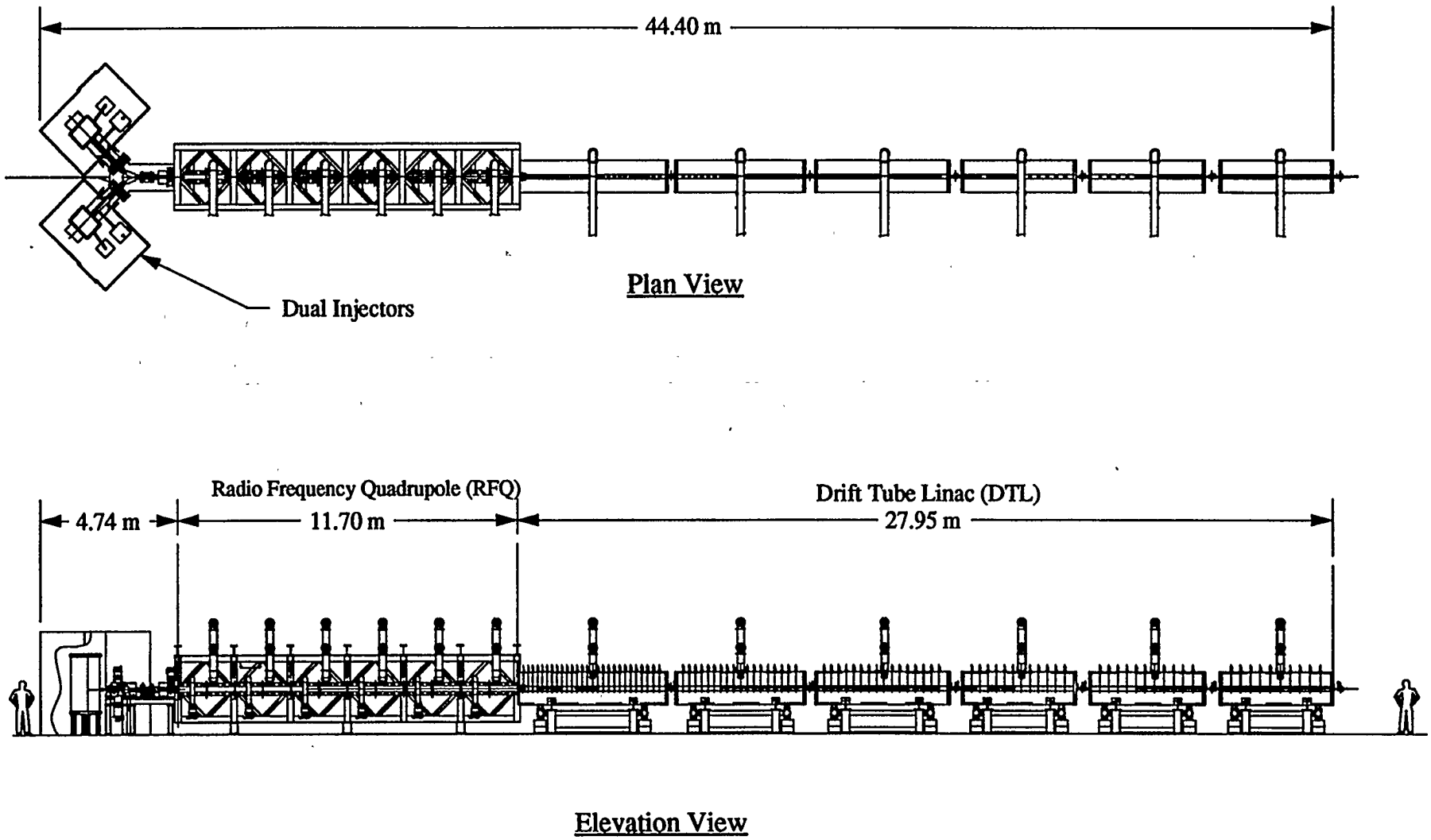

Fig. 2.6.2-2. IFMIF accelerator layout.

2.6.2.2 Injector

The IFMIF ion injector, consisting of the ion source and the LEBT section will have to deliver sufficient current to the RFQ to achieve a 125-mA RFQ output current. This implies that the ion source will have to produce an estimated 155-mA D^+ of which 140-mA will be transported through the LEBT.

In addition to high performance, the ion injector will also have to provide high operational availability. Recognizing that the ion source will require service at ~1-d to 1-week intervals, a dual ion injector, as depicted in Fig. 2.6.2-3, has been specified. The dual injector includes two high-current CW ion sources (one standby). Either source can be switched into the low-energy beam transport line by use of a dipole magnet (with reversible polarity/ac cycling).

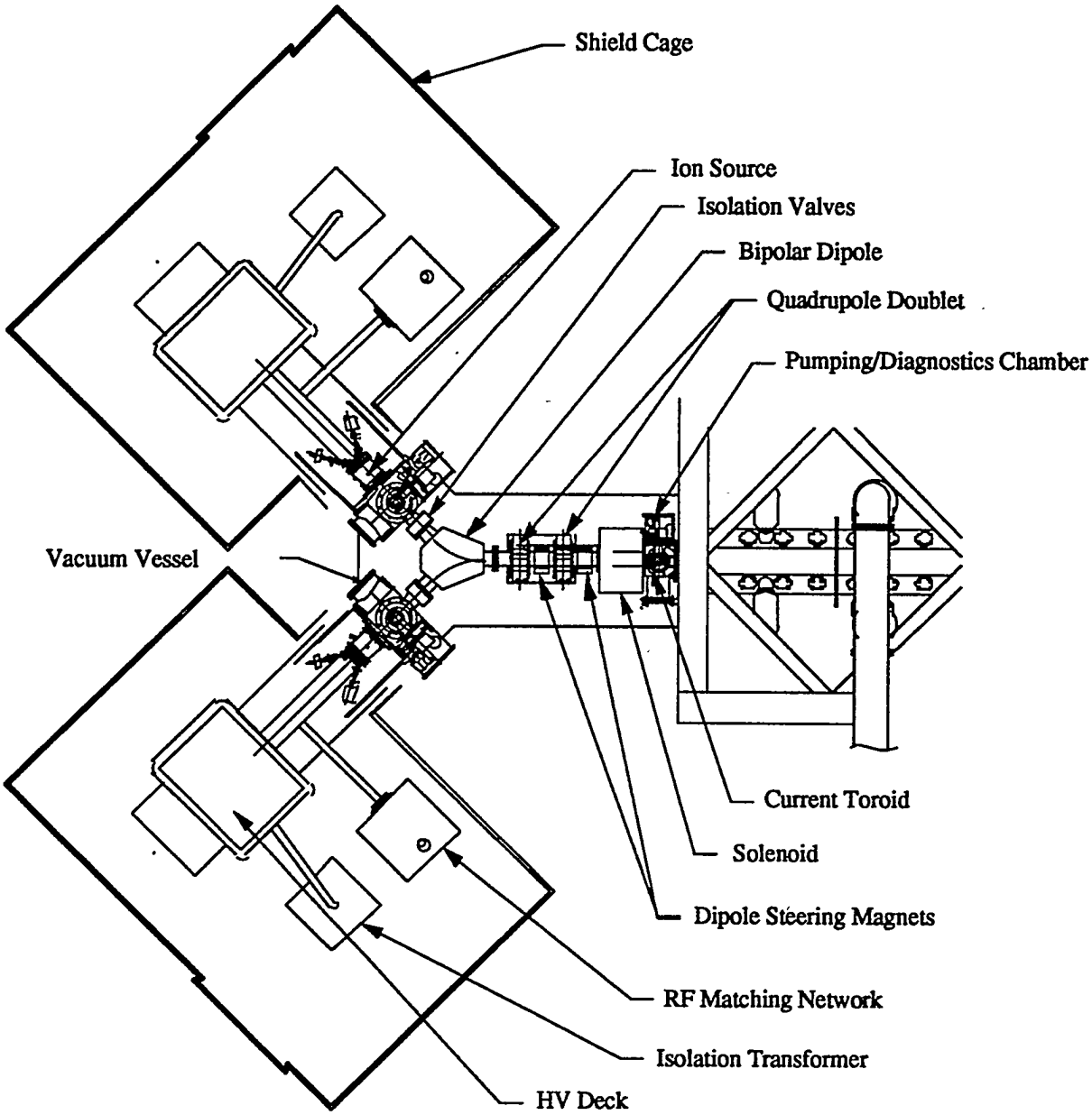

Fig. 2.6.2-3. Dual ion injector layout.

The top-level performance requirements for the ion injectors are described in Table 2.6.2-1. RAM requirements for the ion injector (and other systems) are provided in Sect. 2.6.5.

Table 2.6.2-1. Top-level performance requirements for IFMIF ion injectors.

Requirement	Specification	Detail/Comment
Particle type	D^+	H_2^+ for testing (avoids activation). Requires dedicated ion source.
Ion source type	RF or ECR	Either has potential to satisfy requirements Selection TBD
Number of ion sources per beamline	2	One operational, other standby
Ion source switching	Dipole Magnet	Plus quadrupole focusing over additional transport leg
LEBT type	Solenoid	With TBD-type space charge neutralization
Output energy	100 kV	
Output current	140-mA	D^+ delivered to RFQ
Current noise fluctuation	≤ 2%	
Normalized rms transverse emittance	0.02 p-cm-mrad	Higher values possibly acceptable
Duty factor	CW	Pulsed tune-up and start-up
Modulation capability	100 ms - CW @1-20 Hz	Method TBD
Current tuneability	0 - 140-mA over ~500 ms	Avoid target thermal shock during pulsed operation
Source lifetime	>300 - 1000 hours goal	Lab experience presently ~200 h with rf antenna driven source
Beam turn-off time	<5 μs	Principal safety assurance
Operational instrumentation	TBD	Characterize emittance on separate test stand
Maintainability	TBD	Pending assessment of LEBT/RFQ internal activation

There are two possibilities for the IFMIF deuterium ion source. The first is the Electron Cyclotron Resonance (ECR) source of the type operated successfully at Chalk River and Los Alamos. The second, an RF-driven, volume ion source of the type developed by Lawrence Berkeley Laboratory, also holds great promise for high current operation with high D^+ fraction and low emittance. The issue of rf window (ECR source) and antenna (rf source) lifetime is important and is currently being investigated at Los Alamos, Northrop Grumman and the University of Frankfurt. Although the ion source will be a critical element of the IFMIF system, the choice of rf or ECR source for this study will have very little impact on cost or facility requirements.

The injector for IFMIF will consist of dual ion sources of either the ECR or rf type. From the standpoint of the facility these two types of sources are nominally identical with the rf source requiring a few kilowatts more power for the rf input to the plasma. The high voltage areas and equipment spaces will be the same. Each of the two ion sources will be mounted on a vacuum vessel with associated extraction optics to accelerate the output beam to 100 keV. The high-voltage enclosure, all of the HV power supplies, and the rf power supply will be duplicated for each source. Immediately following the source vacuum vessel will be a vacuum isolation valve that will allow service of the ion source while the remainder of the injector is under vacuum and operating on the second source. Following the valve is a bipolar dipole magnet that will bend the beam toward the RFQ and through the final LEBT optics. One possible solution to these optics, shown in the accelerator layout, consists of a quadrupole doublet followed by the final focusing solenoid that provides the required high

convergence beam at the entrance to the RFQ. Also included in this leg of the LEBT will be a pair of steering dipoles for fine positioning of the beam and some diagnostics. Of primary importance will be beam current monitors at several points along the LEBT. As a minimum, current measurement at the output of the source enclosure, at the output of the dipole, and at the input to the RFQ will be required. These signals will be tied in to the safety interlock system along with other current monitors along the entire accelerator and HEBT to rapidly detect catastrophic beam loss. Other diagnostics may include video imaging of the beam profile against the background gas in the LEBT as a measure of quality and stability before injection into the RFQ.

Experimental results with rf ion sources indicate that ion source operation with H_2^+ at or near full current may be possible. At present, however, further development to achieve full performance at the required lifetime and experimental verification of the source and LEBT system is required, using a dedicated H_2^+ development system. In this application, a dedicated ion source optimized for H_2^+ production and extraction will be required.

2.6.2.3 Radio Frequency Quadrupole (RFQ)

The RFQ for IFMIF, shown in Fig. 2.6.2-4, accelerates the beam from 100 keV to 8-MeV and bunches the dc beam from the injector as required for injection into the drift tube linac. The RFQ combines these functions using strong alternating phase electric field focusing that is independent of particle velocity. The output energy of the RFQ was determined by trading off the capability to magnetically focus and contain the high current deuterium beam at low velocity in a DTL and the length and power consumption of the RFQ. Eight MeV was selected because it allows a FoDo magnetic lattice in the DTL which is desirable for halo control. The high output energy, however, necessitates a long RFQ structure of approximately 11.7 m. To achieve this in a stable, tunable cavity, the RFQ will be segmented into three longitudinal rf segments that are resonantly coupled through irises in intermediate end walls[1]. This technique has been successfully proven on a 350-MHz RFQ cold model. The rf resonant coupling serves to separate the longitudinal modes of the RFQ sufficiently from the operating mode for stable tuning. Each of the three rf segments is made from four physical segments that are each approximately 1 m long. This segmentation is done simply to facilitate fabrication by brazing[2] or electroforming[3] and has no effect on the operational characteristics of the device. The segmented RFQ can be powered at any point or points along its length so it is not required to power each of the three segments independently. The RFQ requirements are summarized in Table 2.6.2-2.

The RFQ structure is a surrounding box section that is supported vertically and horizontally every 2 m to prevent deflections.

RF power will be delivered to the RFQ as shown in Fig. 2.6.2-6 to twelve individual drive loops. It is estimated that the RFQ will require a minimum of 3 MW of power thereby requiring each drive loop to handle about 250 kW.

Table 2.6.2-2. Top-level performance requirements for IFMIF RFQ.

Requirement	Specification	Detail/Comment
Particle type	D^+	H_2^+ for testing (avoids activation)
RFQ type	Resonant Longitudinal Coupling	Recent LANL design
Number of rf segments	3	12 physical segments, each a 4-vane integral structure
Rf operating frequency	175 MHz	
Input energy	100 keV	
Output energy	8-MeV	
Input current	140-mA	
Output current	125-mA	Nearly all losses below 2-MeV
Rf power	~3 MW	
Normalized rms Transverse emittance	≤ 0.04 pi-cm-mrad	
Normalized rms longitudinal emittance	≤ 0.08 pi-cm-mrad	
Transverse aperture factor	TBD	Accelerator section
Longitudinal aperture factor	TBD	Accelerator section
Duty factor	CW	Pulsed tune-up and start-up
Maintainability	TBD	Pending assessment of RFQ internal activation

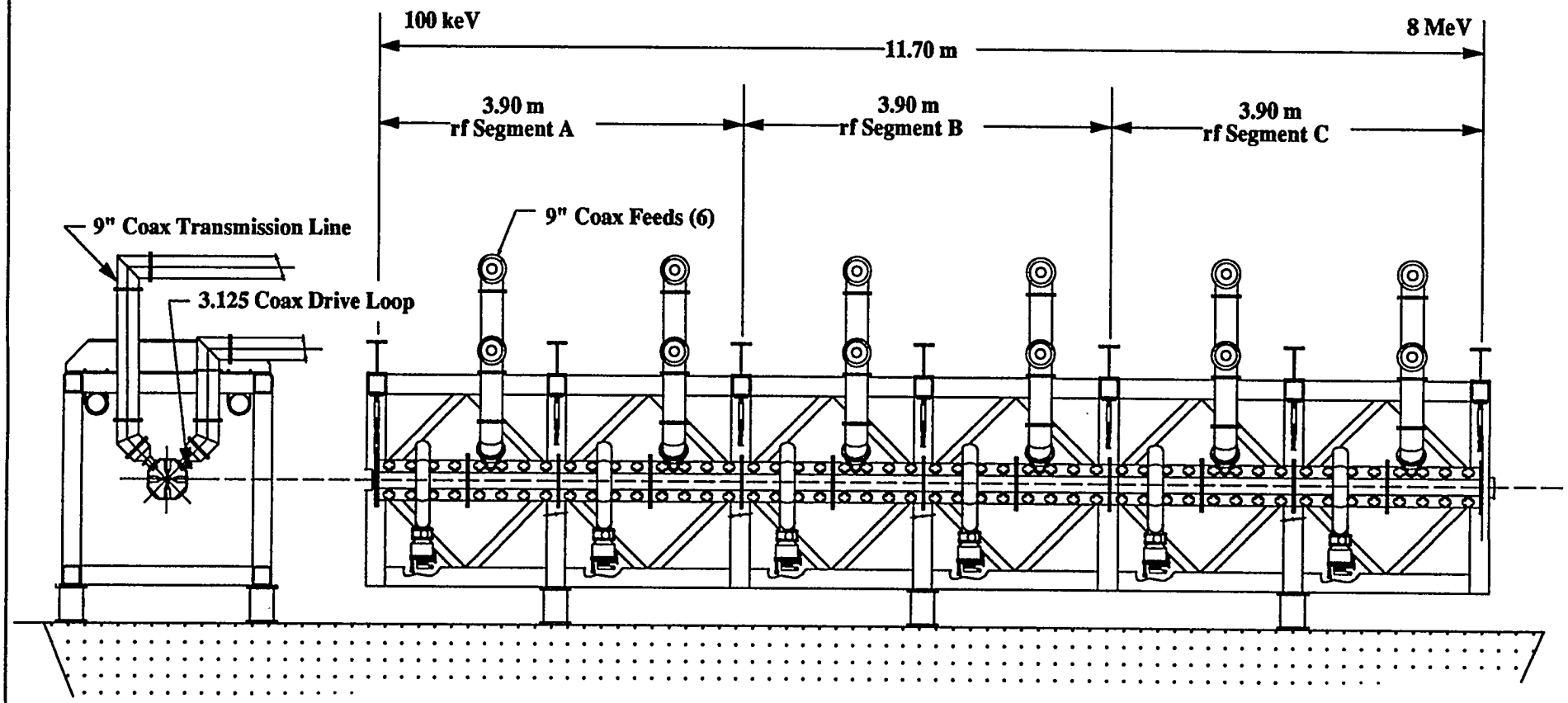

Fig. 2.6.2-4. IFMIF Radio Frequency Quadrupole.

2.6.2.4 Drift Tube Linac (DTL)

The IFMIF DTL, shown earlier in Fig. 2.6.2-1, accelerates the beam from 8-MeV to 30, 35, or 40-MeV. The design is based upon conventional Alvarez technology with post couplers for stabilization. It includes six DTL tanks with a peak accelerating field of 1.8 MV/m.

Each of the drift tubes will be mounted on a girder to allow periodic remote removal and replacement. Radiation hard electromagnetic quadrupoles (EMQs) are installed within the drift tubes to provide the transverse focusing in a FoDo lattice. Resonant frequency control will be done by thermal control of the cavity cooling water.

The lengths, numbers of cells, and rf power requirements of the individual tanks are as indicated in Fig. 2.6.2-5. The total length and rf power are 26.5 m and 6.2 MW, respectively. The DTL requirements are summarized in Table 2.6.2-3.

Table 2.6.2-3. Top-level performance requirements for IFMIF DTL.

Requirement	Specification	Detail/Comment
Particle type	D^+	H_2^+ for testing (avoids activation)
DTL type	Alvarez	With post couplers
Number of DTL tanks	6	
Rf operating frequency	175 MHz	
Input energy	8-MeV	
Output energy	30, 35, 40-MeV	Selectable
Input current	125-mA	
Output current	125-mA	Current loss < 3mA/m (3 nA/m goal)
Rf power	6.2 MW	6 rf tubes, 12 rf couplers
Beam aperture	3 cm	Diameter
Normalized rms transverse emittance	≤ 0.04 pi-cm-mrad	
Normalized rms longitudinal emittance	≤ 0.08 pi-cm-mrad	
Transverse aperture factor	TBD	Accelerator section
Longitudinal aperture factor	TBD	Accelerator section
Duty factor	CW	Pulsed tune-up and start-up
Maintainability	Hands-On	Pending achievement of 3 nA/m current loss goal (design to allow for remote maintenance if required)

Energy selectivity in the IFMIF accelerator is achieved by selectively powering the final three DTL tanks with re-tuning of the electromagnetic elements of the beamline in accordance with the operating energy.

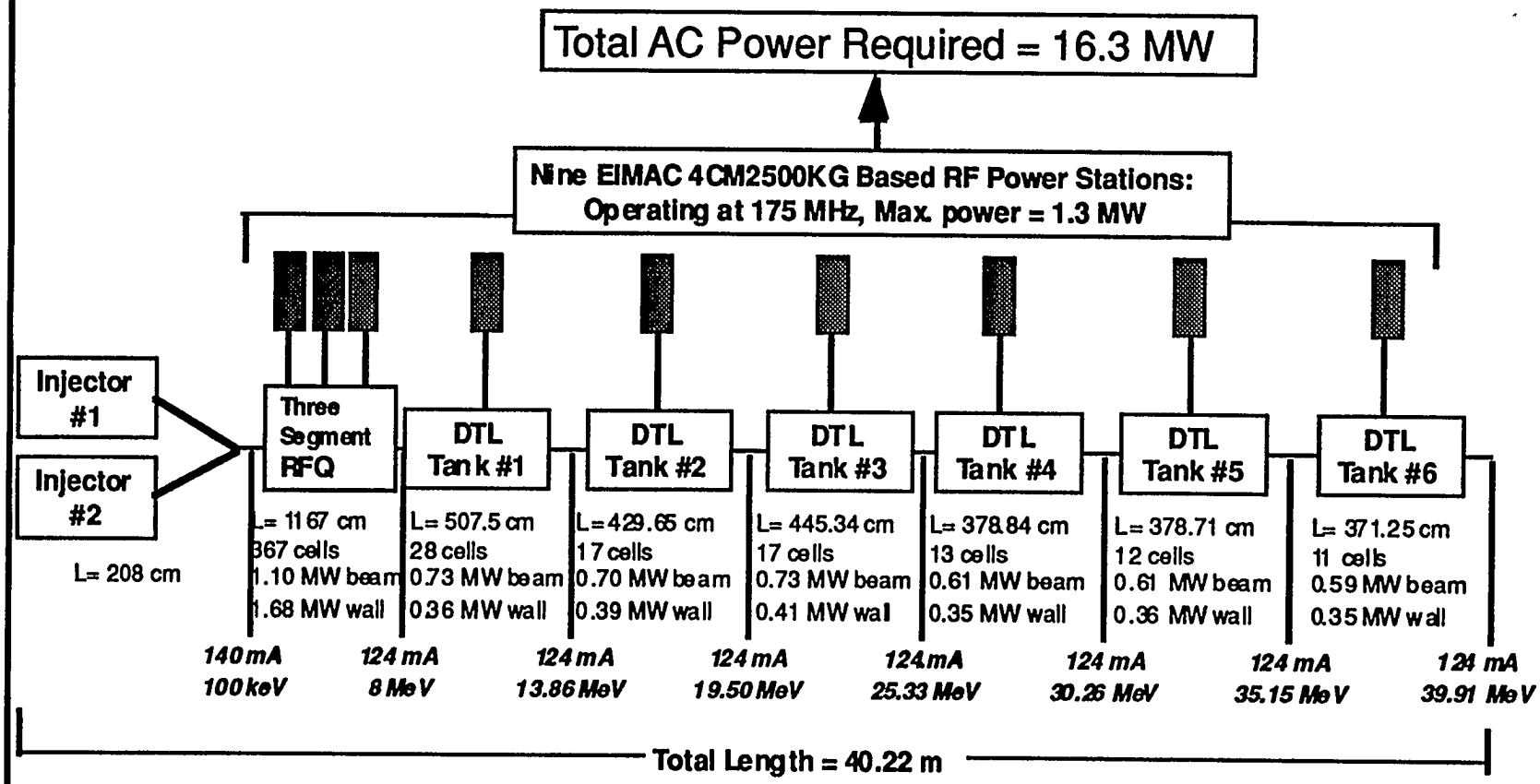

Fig. 2.6.2-5. Major features of the DTL.

2.6.2.5 Radio Frequency (RF) power

The rf design that has been established as the baseline was evolved from a series of system-level trades that resulted in a design using a common amplifier tube type in all of the rf stations, although it operates at different power levels to match the specific requirements of that station. This section summarizes the requirements for each rf station, describes the selected tube type, and provides a brief description of the equipment and its electrical, mechanical, and thermal interfaces.

2.6.2.5.1 Radio frequency power subsystem (RFPS) Requirements

The RFPS is defined as the equipment necessary to convert the high-voltage ac prime power to suitably conditioned rf power for input to the IFMIF accelerator cavities. All of the relevant electronics, packaging, and internal cooling from the frequency source to the high-power rf transport to the cavities, are included in the RFPS. The RFPS block diagram, Fig. 2.6.2-6, illustrates the major components and interfaces for the RFPS.

Table 2.6.2-4 provides the power and frequency requirements for each of the rf stations. The rf power is based on the combined accelerator requirements for power into the beam and cavity wall losses, to which are added the losses of the rf transport and circulator. In addition, a 5% margin is also assumed. The quality of the rf delivered to the accelerator cavities is controlled to within ±1 degree in phase and to within ±1% in amplitude, with a low-level rf control system that is based upon the use of in-phase and quadrature phase control. The rf reference distribution provides all of the rf stations with a stable source during operation and an internal rf source at each rf station allows off-line maintenance or other testing to be accomplished without the need for operating the entire system. The primary power interfaces to the rf stations will be at 4160 V, 3 phase, 60 Hz and will have a separate power supply at each rf station. Instrumentation includes a status and control interface to a digital bus with emphasis being placed on status monitoring that will be predictive of failures rather than simply identifying a failure after the fact. The goals being set for the rf subsystem include 96.7% availability, a 130 h MTBF, and a 4.4 h MTTR with a design life of 40 years.

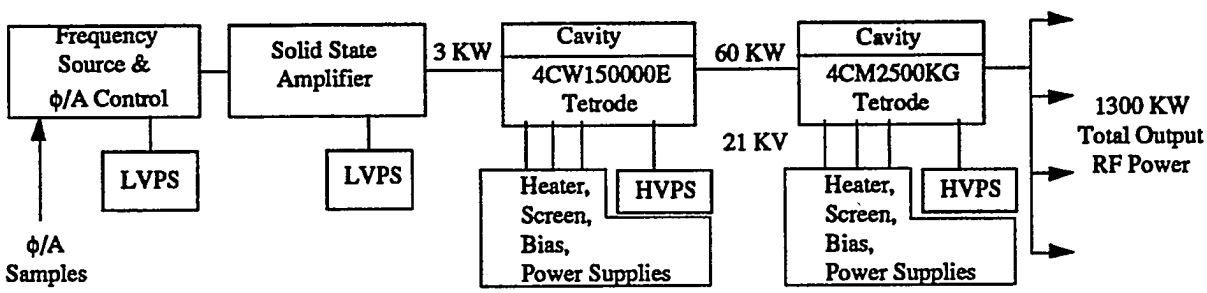

Fig. 2.6.2-6. RF power subsystem block diagram.

Table 2.6.2-4. RF station requirements.

RF Station	No. of rf Drives	Freq-uency	Power to each rf Drive	Transport losses	5% Power Margin	Total Power Req'd
RFQ No. 1	4	175 MHz	232 kW	97	54	1079
RFQ No.2	4	175 MHz	232 kW	97	54	1079
RFQ No. 3	4	175 MHz	232 kW	97	54	1079
DTL No. 1	2	175 MHz	545 kW	88	63	1241
DTL No. 2	2	175 MHz	545 kW	88	63	1241
DTL No. 3	2	175 MHz	570 kW	93	65	1299
DTL No. 4	2	175 MHz	480 kW	78	55	1093
DTL No. 5	2	175 MHz	485 W	79	55	1104
DTL No. 6	2	175 MHz	470 kW	76	54	1070
Momentum compactor	2	176 MHz	100 kW	21	12	233
Energy dispersion	9	175 MHz	50 kW	53	27	530

2.6.2.5.2 Microwave tube selection

The selection of amplifier tube type was driven by limitations that are principally derived from the operating frequency, the rf power level, and dc to rf efficiency. At the lower end of the spectrum tetrodes are a proven high-power rf power source, and klystrons become overwhelmingly large and impractical. The power levels were also considered too high for IOTs at this time and certainly too high for solid-state amplifiers to be cost competitive as output amplifiers. The amplifier selected was a high-power tetrode, the Eimac 4CM2500KG, that has already been used in other accelerator applications, but at slightly different frequencies. The Eimac 4CM2500KG, or its equivalent, would operate in the grounded grid mode to maximize its stability. Since the gain is relatively low, typically 14 dB, about 60 kW of rf drive power is required, ignoring losses and safety factor. Therefore, another tetrode with the capability of at least 100 kW is required as a driver tube. The 4CW150000E tetrode or equivalent would fill the driver requirement and would also reduce the drive required for the predriver stage to a few kilowatts, within the range for solid-state amplifiers to be cost competitive. A solid-state preamplifier maximizes the reliability of the rf chain without adding significant cost to the project. The same rf chain can be used for each of the rf Stations. However, since the momentum compactor requires relatively low power, it is possible that one, or possibly two, of the driver amplifiers could meet that requirement at lower cost than operating a full power rf station at such a reduced power level.

2.6.2.5.3 Radio frequency power subsystem description

The RFPS consists of the 11 rf stations shown in Fig. 2.6.2-7, along with the rf source and reference distribution, internal cooling loops within each rf station that interface to the IFMIF site cooling system, and status, monitor, and control interfaces that maintain communication with the master control system via data bus interconnections.

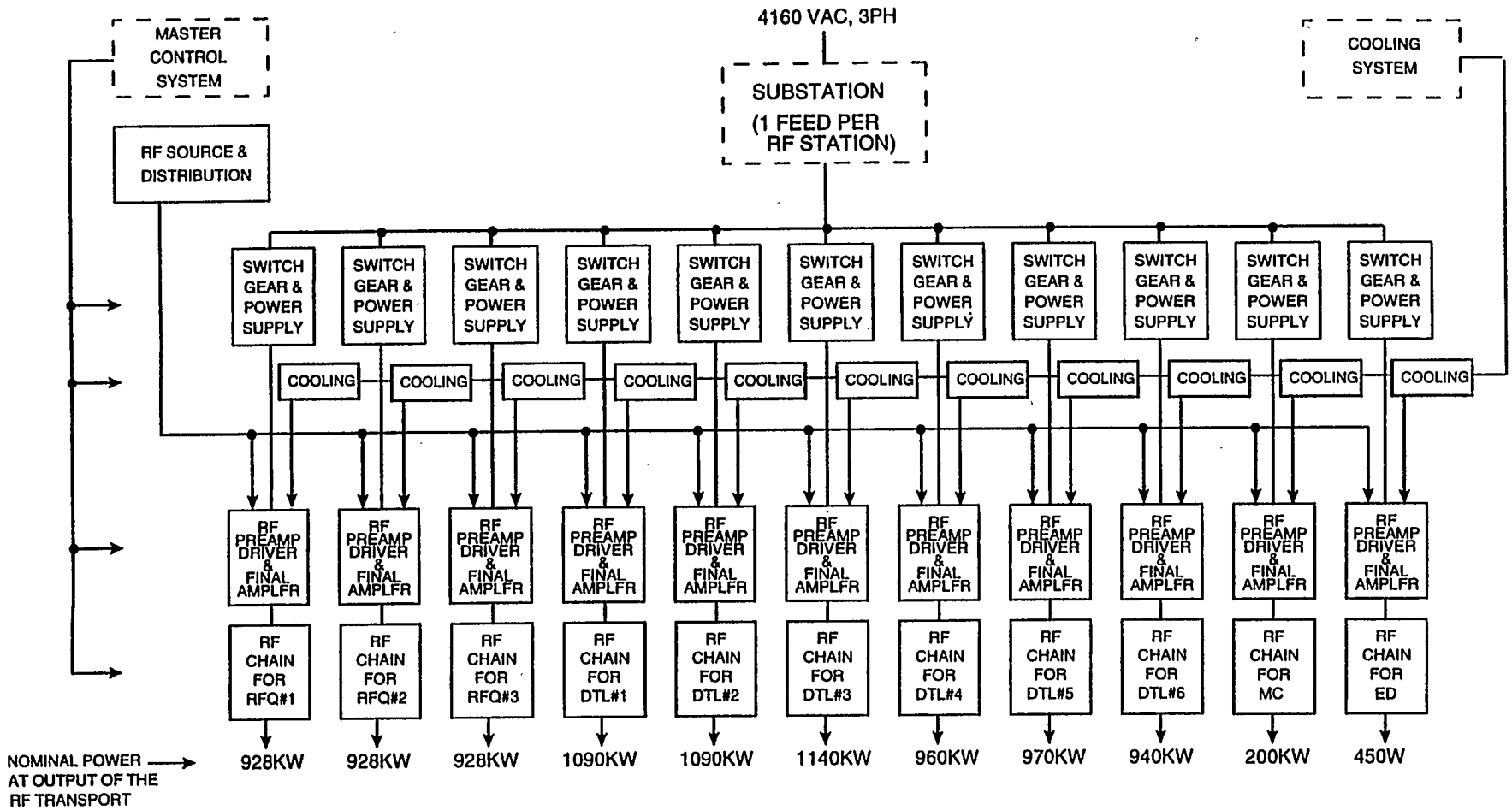

Figure 2.6.2-7 RF Power Subsystem

2.6.2.5.3.1 Configuration

The basic rf power station employs a three-stage amplifier with the 4CM2500KG tetrode or equivalent as the final amplifier, a 4CW150000E tetrode or equivalent as a driver amplifier, and a solid-state amplifier as the predriver stage. The detailed block diagram of a typical amplifier portion of an rf station is depicted in Fig. 2.6.2-8, and it shows the peripheral power supplies and the electrical relationship of the subassemblies within an rf station. The primary electrical feed to each rf station is planned to be 4160 V, 3-phase, 60 Hz with a separate 120/208V line to operate various controls and to allow diagnostics and/or maintenance to be performed without the need to apply the high-voltage primary power. All of the rf stations are functionally the same but the operating points and characteristics vary in order to optimize the rf power delivered by the station to the requirements of the specific accelerator cavity that it is driving. The output from each of the final power amplifiers is divided into multiple outputs, depending on which cavity the rf station is feeding. Fig. 2.6.2-9 shows the rf transport configurations for the various rf stations. The coaxial transmission lines are used throughout the rf transport starting with 19 in. coax at the high power tube output. Note that the vacuum window in the transmission line is located at the input port of the circulator to minimize the stress that would occur across the window during any arcing or poor mismatch condition.

2.6.2.5.3.2 Cooling

Separate cooling loops are provided in each rf station to provide temperature, flow, and pressure interlocks; a distribution manifold with flow regulators; coolant conditioning and filtering; and a liquid-to-liquid heat exchanger to transfer heat to the IFMIF site cooling system. The flow and heat load for each rf station, operating with the 5% margin, was estimated based on an efficiency of 55% for the total ac to rf and on 95% of the heat load being transferred into the liquid cooling system and 5% into the air. A 20 degree C rise in coolant temperature was assumed across the heat load, and a value of 0.72 L/m/kW (0.19 gpm/kW) was used for heat transfer to the coolant. The results are summarized in Table 2.6.2-5 which indicates both the expected heat load and the flow rate for each rf station.

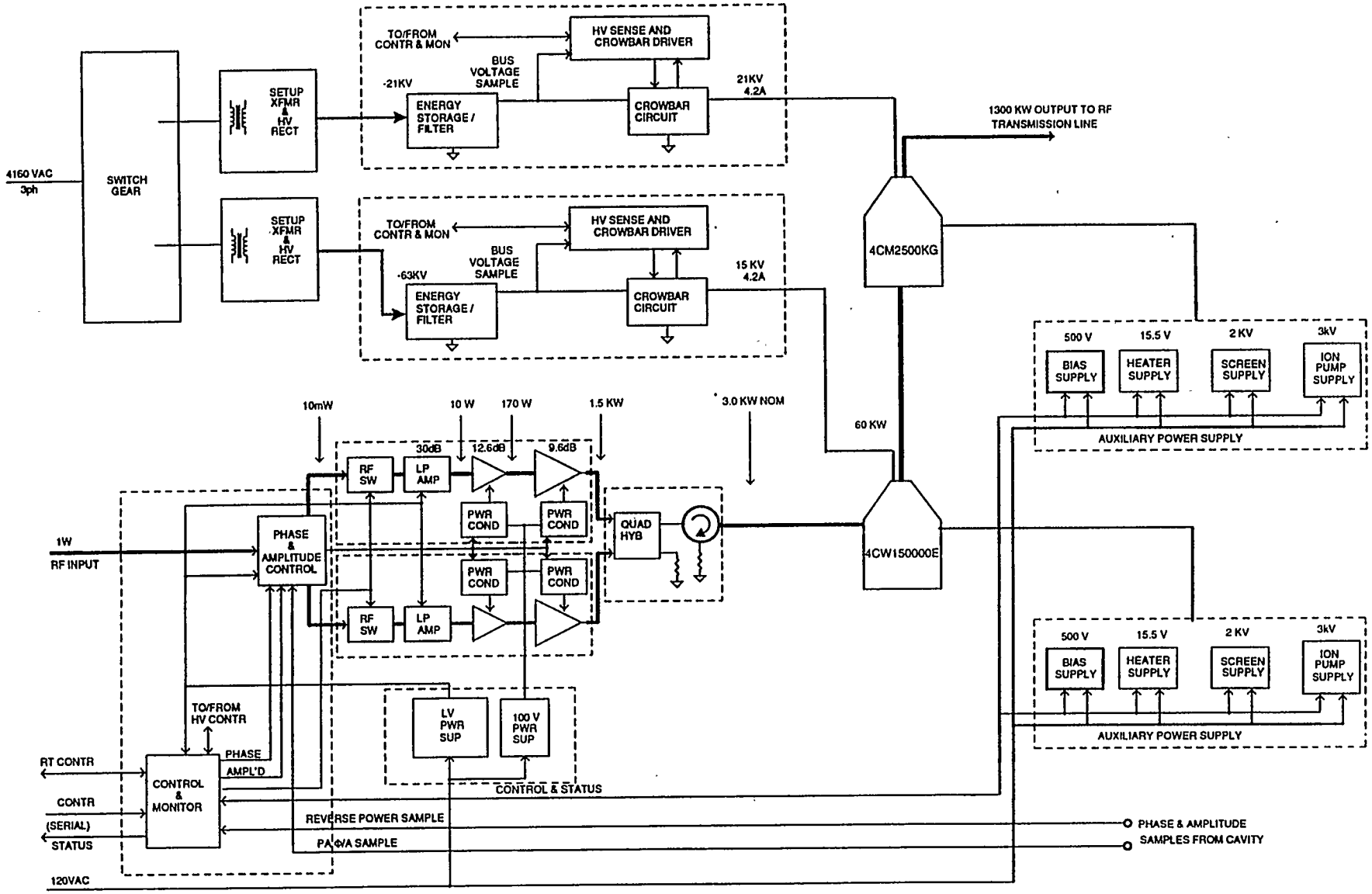

Figure 2.6.2-8 Detailed Block Diagram of RF Station

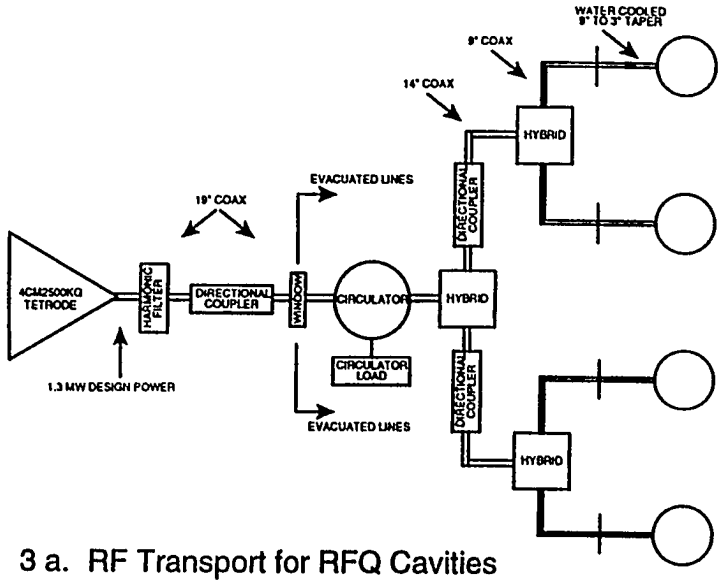

3 a. RF Transport for RFQ Cavities

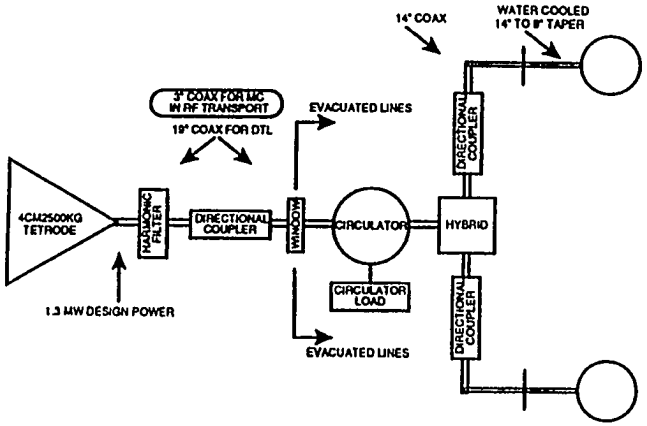

3 b. RF Transport for DTL Cavities and the Momentum Compactor

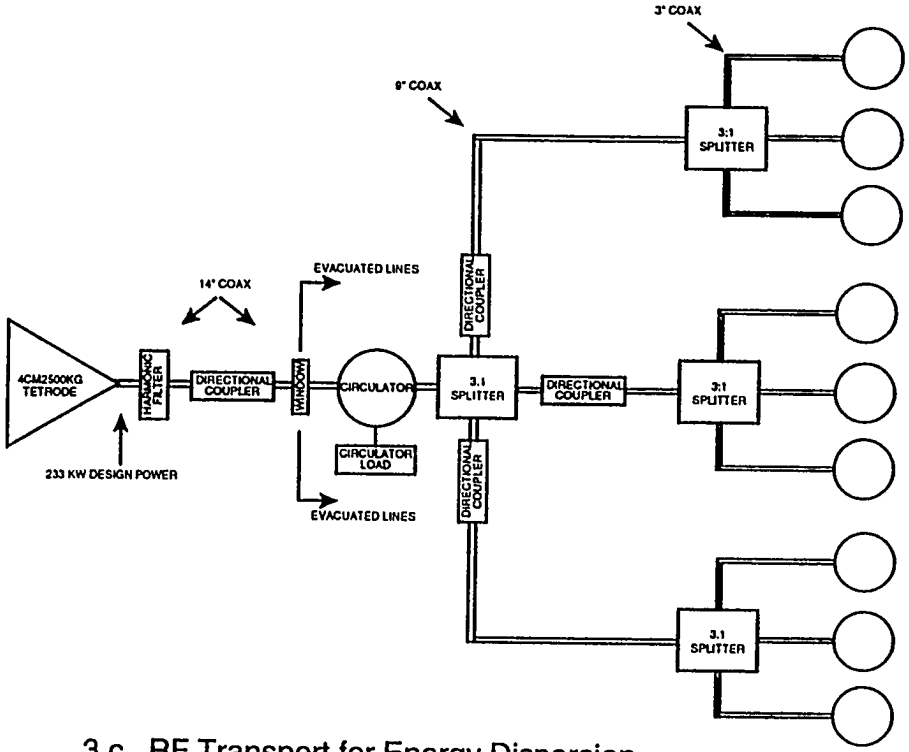

3 c. RF Transport for Energy Dispersion

Figure 2.6.2-9 RF Transport Configurations

Table 2.6.2-5. RF station cooling.

RF Station	Heat into Liquid (kW)	Heat into Air (kW)	Total Heat Load (kW)	Liquid Flow Rate (gpm)
RFQ No. 1	839	44	883	159
RFQ No. 2	839	44	883	159
RFQ No. 3	839	44	883	159
DTL No. 1	964	51	1015	183
DTL No. 2	964	51	1015	183
DTL No. 3	1009	53	1062	191
DTL No. 4	849	45	894	161
DTL No. 5	858	45	903	163
DTL No. 6	832	44	875	157
Momentum compactor	181	10	191	34
Energy dispersion	412	12	433	78

2.6.2.5.3.3 Mechanical Layout

Fig. 2.6.2-10 represents a typical layout for an rf Station. The switchgear, high-voltage transformer, and rectifiers are located outside of the building because of their size, although the voltage levels required by the tetrodes (approximately 21 kV) are low enough that an oil dielectric is not required, thus opening up the alternative of locating the transformers indoors.

2.6.2.5.3.5 Prime Power

The values of ac power input for each rf station are provided in Table 2.6.2-6. The power levels include the power supplies for the final amplifier and all of its associated drivers and preamplifiers. The ac power input for the station cooling system pumps is included but the site cooling tower and pump requirements are not included. The total ac power required for the rf subsystem, 11 rf stations, and the common equipment (frequency source and distribution and the common monitor and control equipment), with the 5% margin, is approximately 20.1 MW.

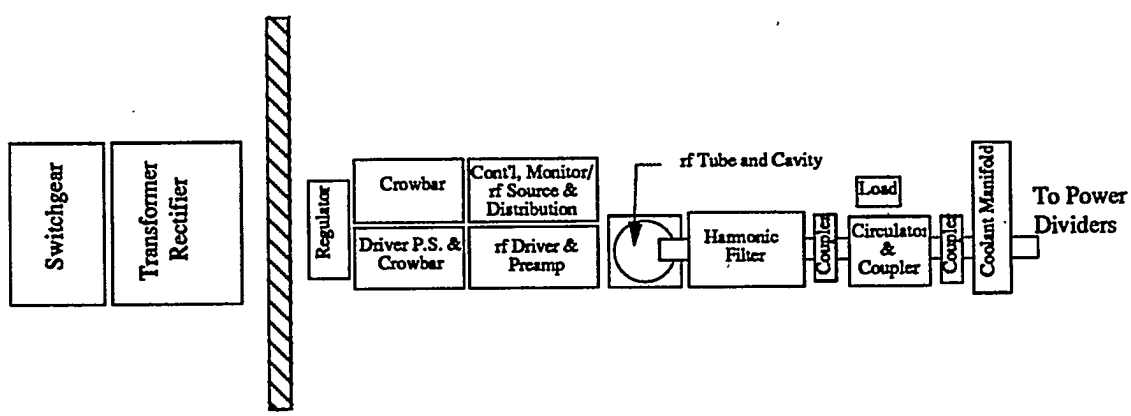

Fig. 2.6.2-10. Mechanical layout.

Table 2.6.2-6. RF station ac prime power.

RF Station	Prime Power (kW)
RFQ No. 1	1962
RFQ No.2	1962
RFQ No. 3	1962
DTL No. 1	2255
DTL No. 2	2255
DTL No. 3	2361
DTL No. 4	1986
DTL No. 5	2007
DTL No. 6	1945
Momentum compactor	423
Energy dispersion	963
Total	**20,083**

2.6.2.6. High Energy Beam Transport (HEBT)

As the name implies, the high-energy beam transport system is required to transport the beam from the exit of the accelerator to one of the two targets or the beam calibration station. In addition, the system must incorporate bends to preclude back-streaming radiation from the targets or the dump into the accelerator vaults. To prevent beam scraping throughout the HEBT, it is important to maintain a large beam pipe radius (12 cm).

The basic beam transport line consists of a conventional FoDo lattice consisting of quadrupole doublets followed by drifts. A goal for the IFMIF transport system is to attempt to make the manipulations of the beams from the four beamlines as near the same as possible. This not only results in similar beam dynamics for each channel but it also minimizes the different kinds of magnetic elements.

Beam-energy dispersion due to space charge forces in the 70-m beamline is an important concern. Hence, a system of rf cavities for maintaining beam bunching and tolerable energy spread is mandated. A final set of rf driven energy dispersion cavities is added after the final dipole bending magnet to provide the desired final energy dispersion of ±0.5-MeV before impact on the target.

Each HEBT transport line incorporates two achromatic dipole bends. The first is a 90° bend that directs the beam into the final beam tailoring optics. The second bend provides a 10° kick so as to shield as much of the final optics from the back-streaming neutrons as possible. The 90° bend will be a multicell symmetric achromatic, consisting of a matching quadrupole doublet followed by a 45° dipole, drift, quad doublet, drift, 45° dipole, and an exit matching quadrupole doublet. The entrance and exit matching doublets are tuned so that the transverse beam envelopes follow a path symmetric about the center of the achromat. As detailed beam transport calculations are performed it may be prudent to adopt a more complex achromat consisting of more dipole and quadrupole elements. This may help to reduce beam losses that should be anticipated in this section. Changes of this type will have insignificant impact on the overall layout of the HEBT.

Once through the 90° bend, the beam is transported to the final optics elements. This consists of a matching section, a non-linear beam expander, and a beam imager. The matching section is made up of four quadrupoles that tune the beam for input to the beam expander. The beam expander section comprises two octupoles separated by two quadrupoles. In this section the beam edges are folded back into the core by the octupoles to produce a well defined and uniform distribution at the target. The beam imager that follows the expander consists of five quadrupoles that serve to produce a beam waist at the entrance to the shielding dipole and energy dispersion cavities (minimizes the bore diameters) and to tailor the final beam spot size at the target [4]. Because the high-order nonlinear elements must be closer to the beam, some beam losses may also be incurred in this section.

The layout shown in Fig. 2.6.2-1 reflects all of these features. The two beamlines of the initial baseline IFMIF system are arranged in vertical orientation. The first is pointed down 10° to the target, which is 14-m downstream. The second is pointed up by the same angle. Additional beamlines, if desired, would be provided on either side of the first two. The system is laid out so that there will be no interference between different beam pipes.

The performance requirements for the HEBT beamline are summarized in Table 2.6.2-7.

Table 2.6.2-7. Top-level performance requirements for IFMIF HEBT.

Requirement	Specification	Detail/Comment
Beam energy	30, 35, 40-MeV	Variable in discrete steps
Output energy dispersion	± 0.5-MeV FWHM	< 41-MeV max
Beam current	0-125-mA	Each beamline. Current invariant.
Duty factor	0-100%	
Beam distribution on target	Rectangular Flat top	20 cm horizontal x 5 cm vertical (Section 2.6.3)
Delivery to target	Completely overlapped	Each beam bent in vertical direction by 10°
Operational flexibility	3 Way	Beam from each accelerator can be directed to each target and to beamstop
Vacuum near lithium flow	10^{-4} Pa	= 0.75×10^{-6} Torr
Instrumentation	TBD	
Radiation streaming	Minimize with 10° dipole bend	
Radiation hardening	Rad hard magnets	All components subject to neutron back-streaming must be rad-hard (Section 2.6.3)
Operability	Identical beam paths	As much as possible

2.6.2.7 Final Beam Calibration Station

A final beam calibration station will be employed to tune-up the beam during commissioning and maintenance prior to beam switching onto the lithium target. This station will use the same beam profile tailoring system as the lithium target.

It will operate with full energy (30, 35, or 40-MeV) and with peak current of 125-mA, but at <2% duty factor to avoid extremely high heat fluxes. H_2^+ will usually be used to minimize activation. The final tune-up mode to CW operation will use the lithium target.

It is anticipated that the final beam calibration station will be modeled after the FMIT beam stop design. However, the details of this approach (beam area on beamstop, beam tailoring system, instrumentation, cooling) are TBD. If safety considerations so dictate, lithium cooling should be considered as an alternative to water cooling.

2.6.2.8 Accelerator Component of Central Instrumentation and Control

The function of the accelerator component of the central I&C system will be to operate in concert with the balance of the central control system to remotely monitor, control and operate the accelerator and beam transport, affording modular and distributed local control as appropriate. It will provide commands, sequence, and data archiving tailored to all of the appropriate operating modes of the accelerator: turn-on, tune-up, normal operations, off-normal operations, rapid shutdown, fault analysis and recovery, predictive modes, and adaptive modes.

This control system could utilize the Los Alamos-developed EPICS control protocol, which is rapidly gaining acceptance for accelerator applications worldwide.

2.6.3. Interfaces

Interfaces between the accelerator and the other four major components (Target, Test Cell Conventional Facilities and System Controls) of the preliminary baseline IFMIF system are described. This section does not specify interface requirements internal to the accelerator facility (e.g., between the accelerator and its beam dump).

The areas of interface between the accelerator and the other facilities are summarized in the Accelerator Facility interface matrix provided in Table 2.6.3-1.

Table 2.6.3-1. Accelerator Facility interface matrix.

Possible Accelerator Facility Interfaces, Other Segments	Target Facility	Test Cell Facility	Conventional Facilities Facility	System Controls Facility
Physical	S	None	X	None
Deuteron beam	S, A	None	None	None
Thermal control	S	None	X	None
Vacuum	S	None	None	None
Radiation protection	None	None	X	None
Electrical	None	None	X	None
Control/safety	P	P	P	P
Maintenance	S	None	X	X

The symbols shown in the table (which are used throughout Section 2.6.3) denote the following:

X - interface exists but not specified herein,
S - interface requirements fully specified and/or referenced herein,
P - interface requirements partially described but one or more aspects of interface remains unspecified (i.e., more than X, but less than S), and
A - one or more alternatives to baseline design presented herein.

It is important that the interfaces be clearly defined. Therefore, where alternatives to the baseline design are discussed in Section 2.6.3, the discussion is identified as an *alternative* and is denoted by *italics*.

As shown in the above table, the principal Accelerator Facility interfaces are with the Target Facility and with the Conventional Facilities that house the accelerator and provide basic services, including radiation shielding. The only direct interface between the accelerator and the test cell involves the control/safety function. (However, the deuteron beam interfaces between the accelerator and target will determine the target performance, so they will also be of interest to test cell designers.) The central control system interface to the accelerator will involve functions such as executive control, monitoring and archiving of system data, tracking of system status, and plant protection.

2.6.3.1 Interfaces Between the Accelerator and Target Facilities

The baseline IFMIF configuration will consist of two accelerator beamlines and two flowing lithium targets. The two beamlines will be oriented in a vertical configuration (one above the other) with each of the two targets located at an elevation midway between those of the two beamlines. The system will be configured such that both beams can be directed to either of the two targets. If the facility capacity were to be increased in the future to four beamlines, then the third and fourth beamline will be positioned slightly above and below the target elevation on either side of the initial two beamlines. In this case, any of the four beamlines can be directed to either target, allowing both targets to be operated simultaneously with a high level of experimental flexibility and redundancy. *(Alternative: The possibility of operating all four beams into a single target could be studied in future work.)*

The magnetic optics elements of each beamline condition, expand, and bend the beam to project a fully overlapped, uniform distribution of rectangular shape onto the free surface of the rapidly flowing lithium target. This produces a forward peaked source of fusion-like neutrons, which stream through the target into the test assembly, where high fluence testing is accomplished. Virtually all of the beam energy is deposited in the target, creating a high CW power density in the flowing lithium. The accelerator and target share a common vacuum boundary. Back-streaming radiation from the target and Test Cell is decoupled from the beamline by use of radiation shielding and by bending the beam so that back-streaming radiation does not have a direct path to the beamline.

The beam profile must be tailored in the vertical direction so that the lithium flow is not shocked by a sudden step increase in the deposited power density. It must be tailored in the horizontal direction to eliminate inadvertent heating of adjacent structure due to the beam fringe. The control system for the accelerator must incorporate a capability for fast shutdown in the event of off-normal heating or other off-normal conditions in the target.

The interfaces between the accelerator and target facilities are identified in Table 2.6.3-2. The symbols shown in the table are as described above. The subsections that address the specific interface areas are indicated.

Table 2.6.3-2. Accelerator Facility - Target Facility interface matrix.

Possible Accelerator Facility Interfaces	Target Facility	Subsection
Physical	S	2.6.3.1.1
Deuteron beam	S, A	2.6.3.1.2
Thermal control	S	2.6.3.1.3
Vacuum	S	2.6.3.1.4
Safety/control	P	2.6.3.1.5
Electrical	None	None

2.6.3.1.1 Physical interface between accelerator beamline and target

The accelerator beamline includes the IFMIF accelerators and all supporting subsystems, specifically including, but not limited to, the HEBT system, the beam expansion and imaging system, and the beamline vacuum and other environmental control systems. The final component of each beamline is the beam expansion tube, which terminates at the target interface. The target facility includes the lithium target and all supporting subsystems, specifically including, but not limited to the target containment structure, the target vacuum control system and the target diagnostic system, among whose functions are determination of the beam position and footprint as delivered to the target. The initial component of the target is the target containment structure, that interfaces with the beam expansion tube and accepts the beam.

As they expand to their final size, the individual beams are contained within individual, rectangular beam ducts, which converge to form one larger beam tube downstream of the final shield wall, immediately before the target. The geometry of this arrangement is shown in Fig. 2.6.2-1 and is further discussed in Section 2.6.3.2.3. The above figure indicates how the accelerator beam will converge on the target but does not indicate the precise boundary between the beam expansion tube and the target containment structure. This physical interface is defined below.

The physical boundary between the beam expansion tube and the target containment structure is a set of rectangular flanges that are located between the collimator shield and the final shield wall. A corresponding set of gate valves, located immediately upstream and adjacent to these flanges provides vacuum system isolation between the accelerator beamline and the target. A second set of fast-acting valves, located upstream in the beamline, provides additional protection.

A vacuum pump will be located in each beamline between these two valves. Because this final pump will be a component of the tritium cleanup system, it will be the responsibility of the Target Facility (or Conventional Facilities).

2.6.3.1.2 Deuteron beam interface

Each IFMIF accelerator produces a 125-mA deuterium beam consisting of positively charged deuterium ions. During normal operation of the baseline design, the beams are fully overlapped on the target to deliver a total beam current to the target of 250-mA. In the event that one of the accelerators is inoperable and the other accelerator continues to be operable, the beam current on target will be reduced to 125-mA.

The beam energy may be selected among the following values: 30, 35, 40-MeV. When both accelerators are operating, these respective values correspond to total beam power levels on target of 7.5, 8.75, and 10 MW.

2.6.3.1.2.1 Beam spatial profile

In normal operation, the footprint of each of the two beams must be rectangular with the long side of the rectangle oriented in the horizontal direction. On projection to the target, the two beams must be fully overlapped in the same area, thus doubling the average flux of deuterons that would be provided by a single beam. In addition, the beam footprints shall be tailored in both the vertical and horizontal directions and the beam flux shall be uniform across the flat top of the beam profile.

Preliminary work to develop a detailed beam spatial profile for specific requirements for the IFMIF target was performed during 1994[5]. Based upon the results of this earlier activity, there is reason to believe that the IFMIF requirements specified below can be achieved through careful design, which may be accomplished in the second half of the CDA.

The following subsections describe the beam profile requirements that the accelerator group has agreed to accept for the upcoming design activity, as well as the underlying rationale for these requirements.

2.6.3.1.2.1.1 Desired characteristics of beam profile

The desired beam profile in the vertical direction has general characteristics similar to those of the profile shown in Fig. 2.6.3-1. As shown, the beam intensity in this direction must be tapered over about 1 cm above and below the beam to avoid shocking the lithium flow with a sudden step increase in the beam-deposited power density. Assuming that the "flat top" of the vertical profile is 5 cm high, and that the average density of particles in a 1 cm edge on either side of the flat top is one half of the average density in the flat top, it follows that the average particle density in the flat top will be 1.04-mA/cm^2 {i.e., $5 \cdot 10^6$ W/$40 \cdot 10^6$ V/[(1/2 • 1 cm + 1 • 5 cm + 1/2 • 1 cm) • 20 cm] = 1.04-mA/cm^2}.

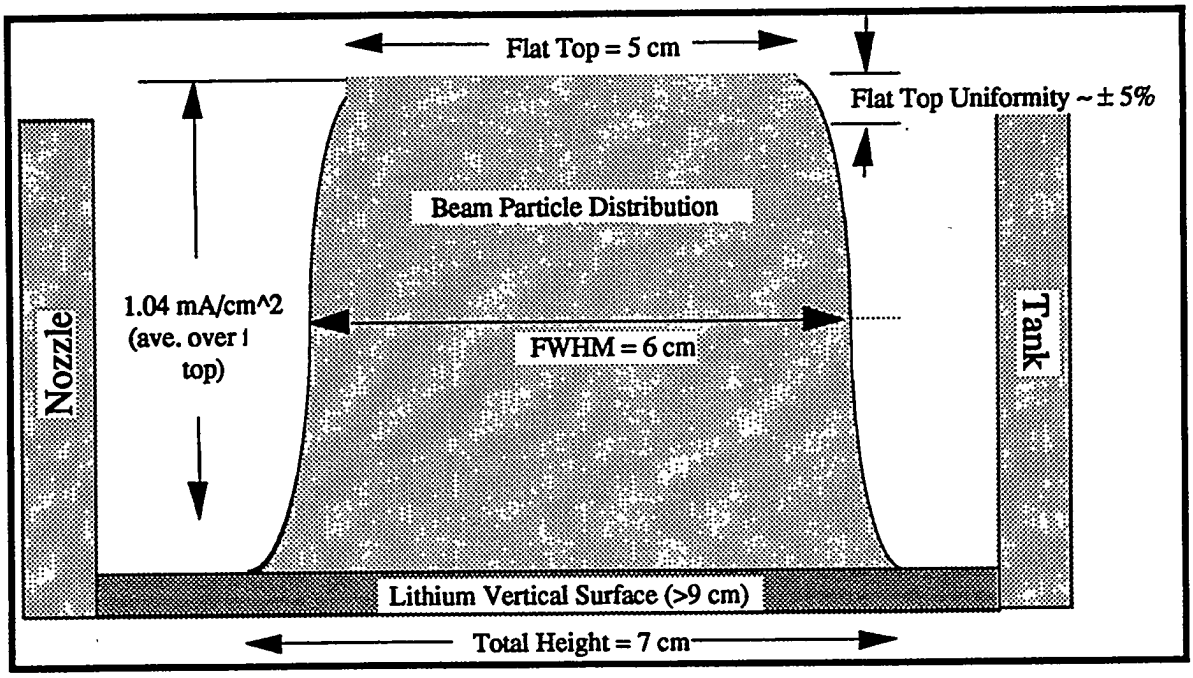

Fig. 2.6.3-1. Beam profile requirement: vertical direction.

The desired beam profile in the horizontal direction is approximated by the profile shown in Fig. 2.6.3-2. The requirement for the horizontal edges, to avoid significant heating of adjacent structure, is to provide a sharp edge with no more than 20 W/cm^2 (0.5-mA/cm^2) beyond the edge. For two beams on target, this represents an attenuation factor (for each beam) of about 5600.

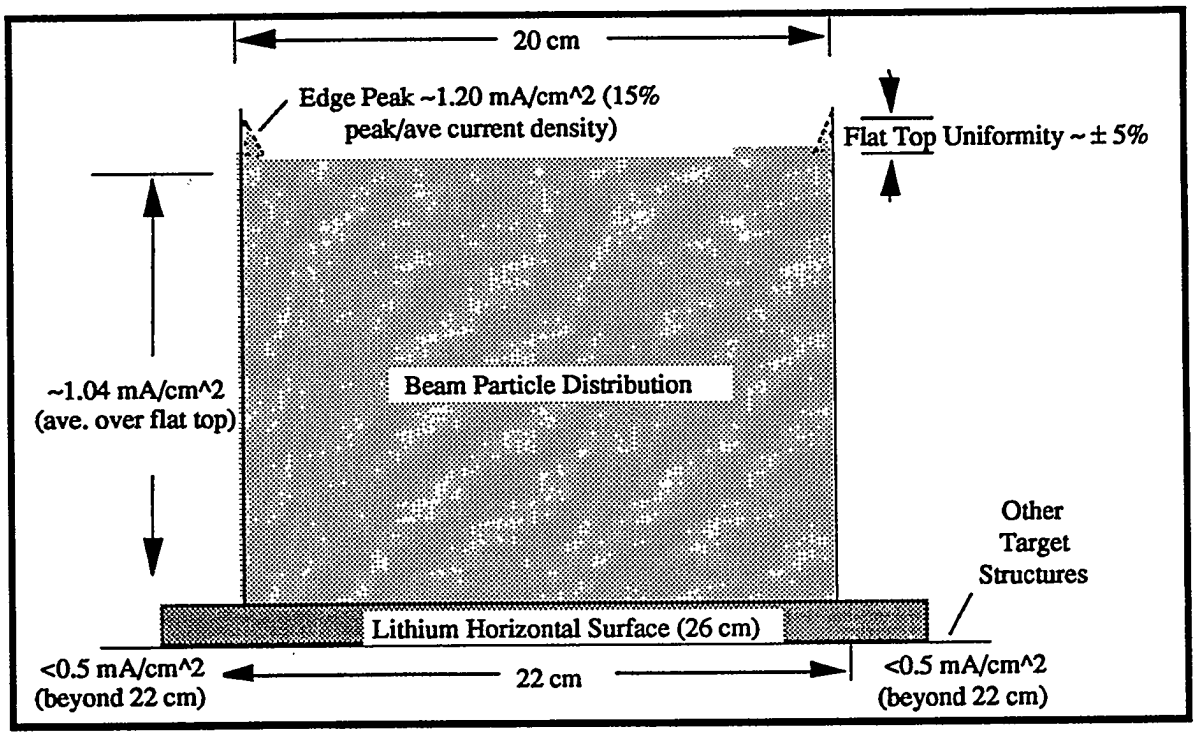

Fig. 2.6.3-2. Beam profile requirement: horizontal direction.

The uniformity of beam intensity within the 5 cm x 20 cm flat top, is ±5% peak/average intensity. The peak particle flux on the horizontal edge of the beam profile must be within 15% of the average flux over the flat top.

2.6.3.1.2.1.2 Expected beam profile characteristics

Fig. 2.6.3-3 from ref. 5 shows the results of a 10,000 particle PARMILA simulation of the particle distribution on a 7 cm x 7 cm target for a 35-MeV, 100-mA ESNIT beam. (The top of the right side shows the horizontal profile and the bottom shows the vertical profile.) This profile provides the desired tapered beam intensity in the vertical direction, as well as sharp edges in the horizontal direction. Considering the embedded uncertainty because of the use of a limited number of particles (ave. ~200/cm^2; ave. uncertainty ~7%), a visual (as opposed to statistical) inspection indicates that the uniformity requirements stated above should be achievable through careful design. The ability to provide the specified four orders of magnitude reduction in the particle power density beyond the horizontal edges of the beam remains TBD.

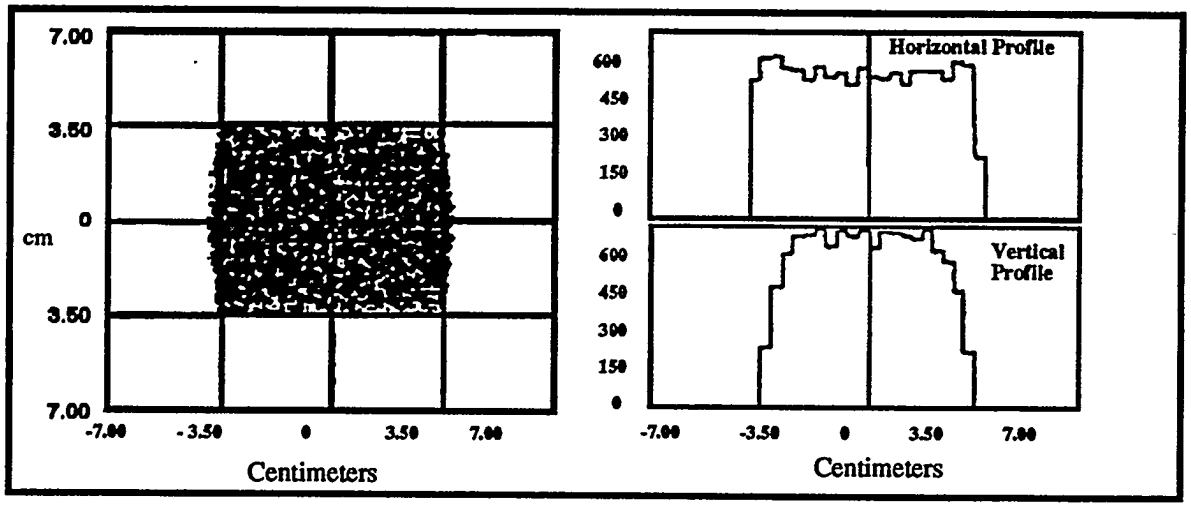

Fig. 2.6.3-3. PARMILA simulation of ESNIT beam profile on target (35-MeV, 100-mA, 7 cm x 7 cm ± 0.5-MeV).

Alternative: If incorporated into the design, the IFMIF beam expander might be able to provide a variable beam width (e.g., from 10 to 20 cm, or even 40 cm), thus providing additional operational flexibility for the user. Three examples of such possible use are: (1) to double the source intensity over a smaller volume (e.g., two overlapping 5 x 10 beams if the target can accept the higher power density), (2) to restore near nominal fluxes to a smaller central volume should only one accelerator be available (e.g., one 5 x 10 beam). (3) to accommodate requirements for a potential higher flux, higher volume upgrade (e.g., overlapping 5 x 40 beams or top and bottom 5 x 20 beams).

Alternative: If the 20 W/cm^2 requirement is not readily achievable, then other approaches to limit the power level outside of the main profile will be employed. These can include cooled beam scrappers within the beam transport system.

2.6.3.1.2.2 Beam energy profile

Based upon numerical results reported in ref. 4 for a similar accelerator, the energy profile of the deuterium beam at the accelerator output is herein represented by a Gaussian with a standard deviation, s, of 0.25-MeV, truncated at 2s (to emphasize the point that the accelerator cannot produce high-energy tails). This energy distribution is shown in Fig. 2.6.3-4.

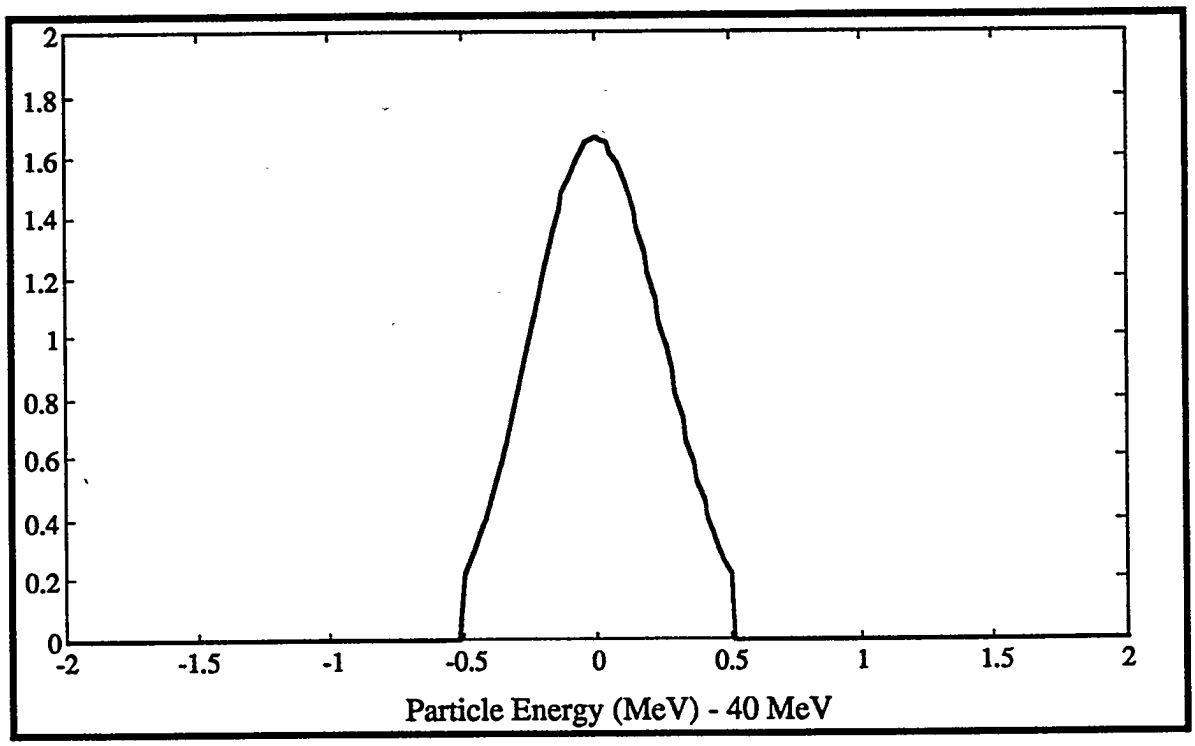

Fig. 2.6.3-4. Normalized probability density of particles entering dispersion cavity.

Energy dispersion cavities located at the end of the accelerator beamline are used to further broaden the beam energy distribution. These cavities superpose a sinusoidal electric field on the particles that pass through them, slightly accelerating some and decelerating others. The frequency of this driving function, ~1 MHz, is selected to be very low compared with the fundamental rf frequency of the accelerator (175 MHz), but very high compared with the frequencies at which disturbances can propagate through the lithium fluid.

The beam energy profile projected to the surface of the target is shown in Fig. 2.6.3-5. This distribution is obtained by using a sinusoidal electric field of amplitude sufficient to change the particle energy by ± 0.5-MeV. As shown, the full width at half maximum (FWHM) is about 1-MeV, while the highest energy of a particle in the distribution is 41-MeV.

Alternative: By varying the amplitude of this field, the beam-energy distribution can be broadened or narrowed as required to further spread the Bragg Peak and reduce the maximum deposited power density in the lithium fluid.

2.6.3.1.2.3 Beam angular intercept conditions

As they expand to their final size, the deuteron beams are contained within individual beam tubes, which converge to form one larger beam tube downstream within the target system. Where the individual beam tubes penetrate the final shield wall, before they converge to a single tube, they should have rectangular (as opposed to circular) shape to minimize neutron back-streaming through the wall.

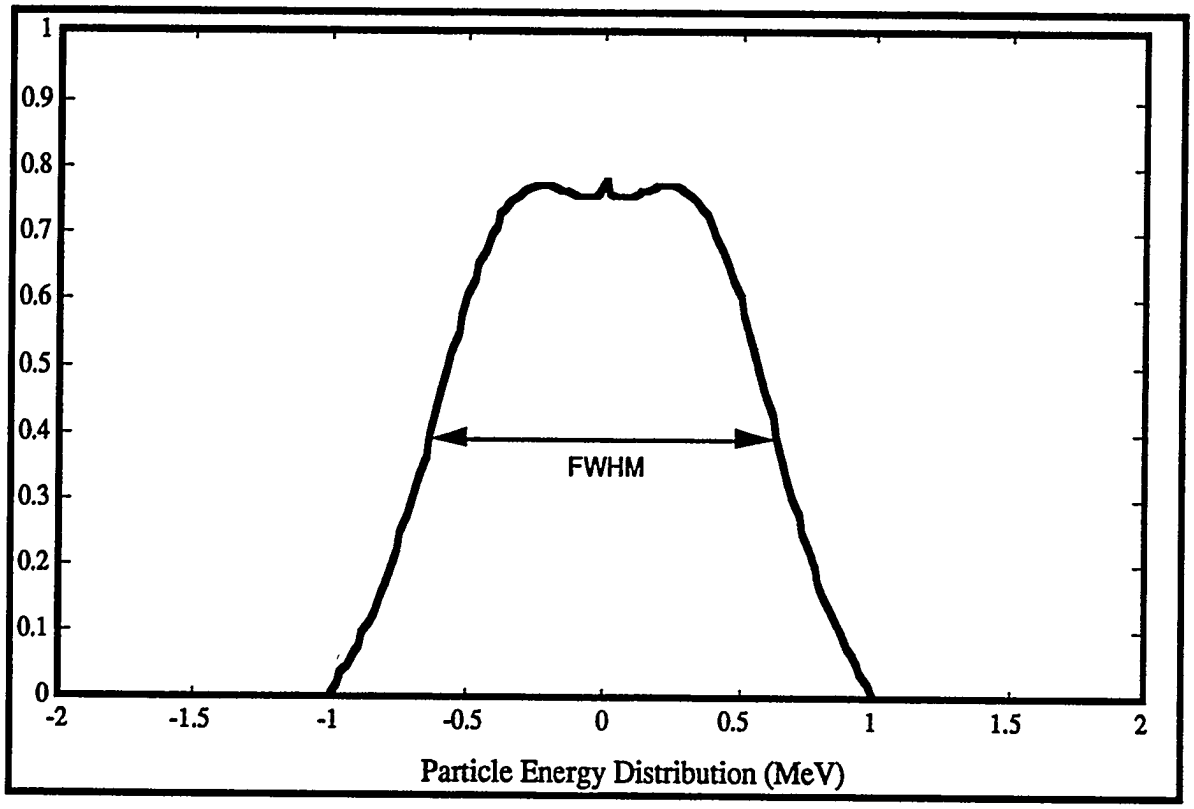

Fig. 2.6.3-5. Normalized probability density of particles leaving dispersion cavity (0 = 40-MeV).

An end view of the beam arrangement for the IFMIF accelerator beamline configuration is shown in Fig. 2.6.3-6. Four beamlines are included. The first two beamlines constitute the baseline IFMIF capability. The third and fourth beamlines indicate potential for future capacity enhancement.

Dipole magnets would be used to bend the beams from all four beamlines towards the lithium target, located on the centerline, 14-m downstream of the dipoles. Beams 1 and 2 would be bent in the vertical direction (only) while beams 3 and 4 would be bent in both dimensions (the impact of this compound bend on the HEBT design requires evaluation). In either case, two of the beams would be fully overlapped on the target.

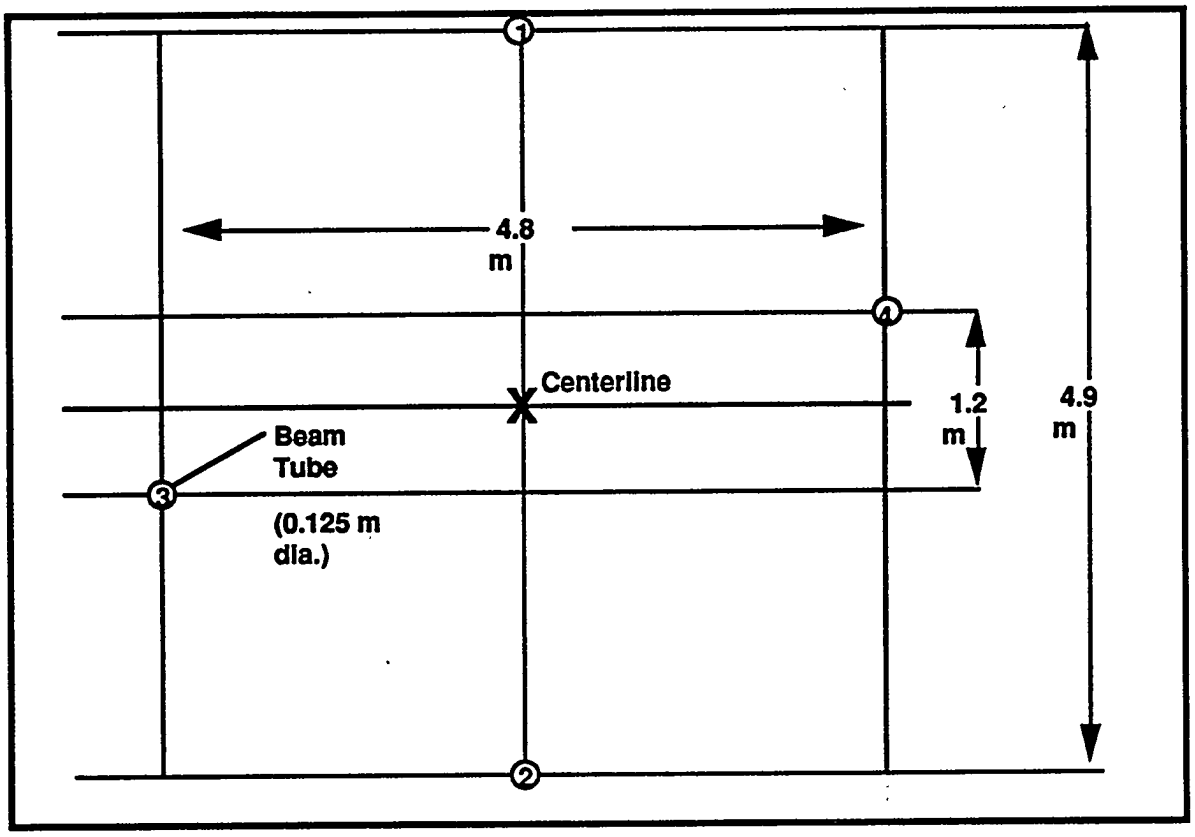

Fig. 2.6.3-6. IFMIF four beam arrangement end view at dipole bend to target.

Mechanical vibrations in the room-temperature drift-tube linac can cause vibration of the drift tubes and the quadrupole magnets contained therein. This causes the beam centroid position to vary, with a frequency spectrum typically in the few hertz range. As a result, the minimum beam centroid position tolerance shall be ± 1 mm maximum at the target. (The centroid is defined as the position of the two-dimensional center of mass of the beam footprint.)

Consistent with the above referenced drawing, Fig. 2.6.3-7 indicates the geometric divergence of the neutron source geometry in the vertical direction for the 14-m target distance and beam bending half-angle of 10°, which applies to beams 1 and 2. (The actual divergence of neutrons produced in the target will be less because of the wider angular distribution of first generation and scattered neutrons.) The corresponding beam-bending half-angle for potential upgrade to beams 3 and 4 is also 10°. Although the horizontal angle is identical, the horizontal geometric divergence is less because the horizontal dimension is four times as large.

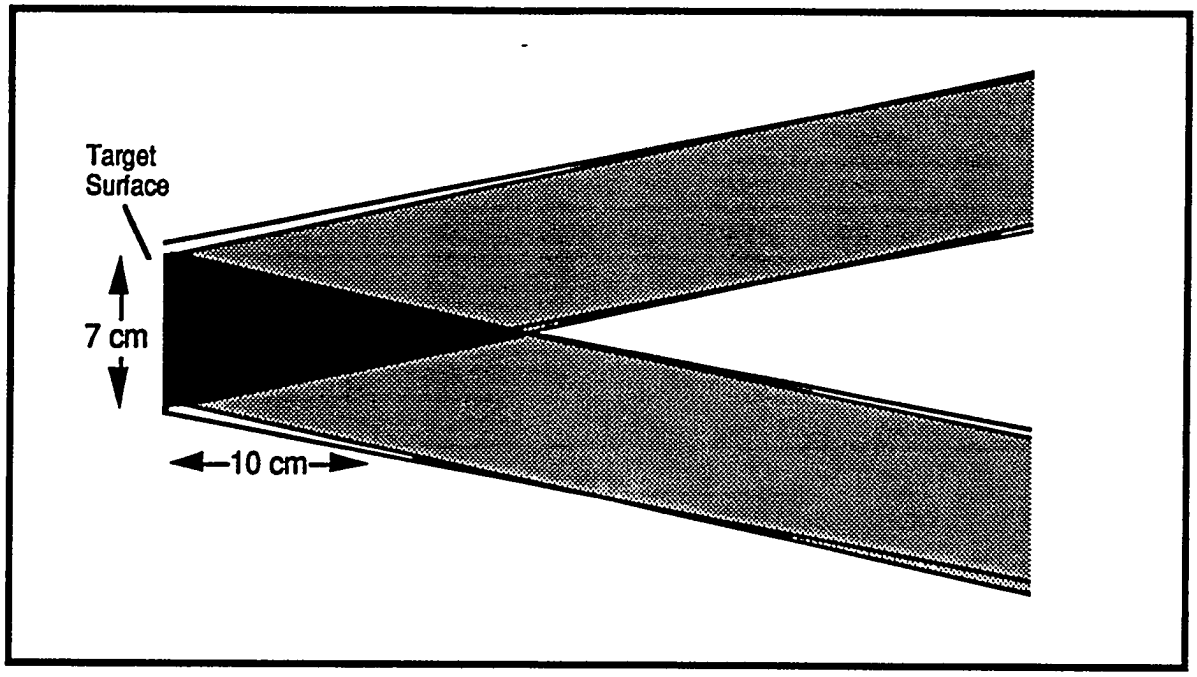

Fig. 2.6.3-7. Divergence of neutron source geometry for target distance of 14-m and beam bending angle of 10°.

Although Fig. 2.6.3-7 (above) illustrates the need to minimize the beam bending angle, radiation shielding considerations dictate that this angle should be as large as possible to minimize machine activation because of neutron back-streaming from the target. As shown in Fig. 2.6.3-8, for a beam-bending half-angle of 10° and a shield offset of 50 cm (from the edge of the shield wall penetration), five of the active beam imager and expander elements (in addition to the beam steering dipole and two energy dispersion cavities) will have to be located in a hot area that must be remotely maintained.

Alternative: Although narrow beam angles may be difficult to achieve (above discussion) ,steep angles can readily be achieved by increasing the spacing between the beam outputs (dipoles) or by shortening the distance to the target Of particular interest for a two target configuration is the possibility of one narrow angle target (larger volume, lower flux) and one large angle target (higher flux, smaller volume). Also, as shown in Fig. 2.6.3-9, larger beam bending angles, greater than 20°, can result in many fewer optical elements in irradiated areas of the facility.

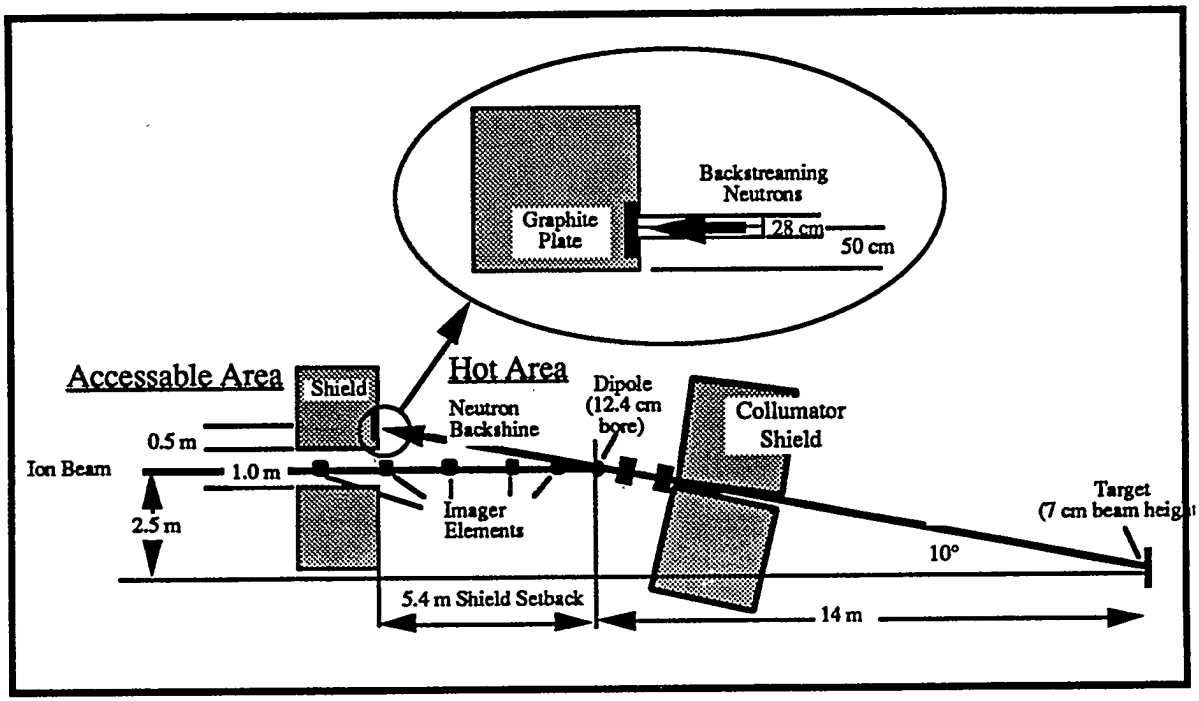

Fig. 2.6.3-8. Neutron back-streaming geometry - 10° bend half-angle.

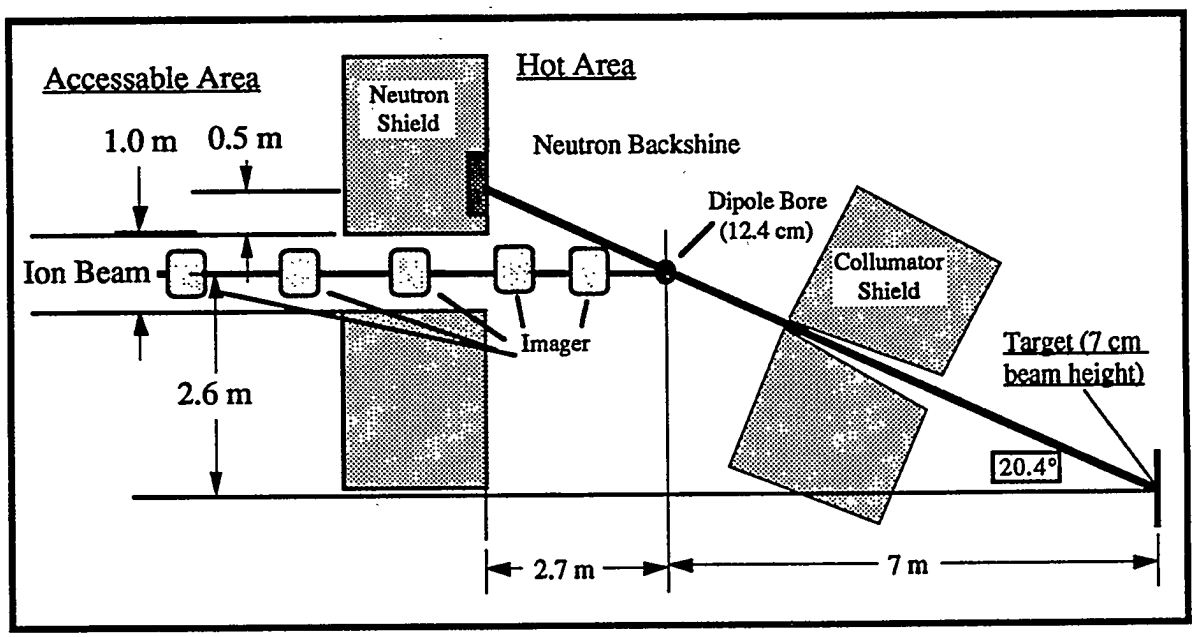

Fig. 2.6.3-9. Neutron back-streaming geometry - 20.4° bend half-angle.

2.6.3.1.2.4 Beam temporal characteristics

Accelerator operations encompass several modes to address the following operational requirements:

- accelerator turn-on,
- CW accelerator operations,
- recovery from routine beam interruptions, and
- accelerator shutdown.

The following discussion provides a brief description of the beam temporal conditions as seen by the target for each of the above modes.

2.6.3.1.2.4.1 Beam temporal distribution during accelerator turn-on

The sequence of events for accelerator turn-on will typically involve the following steps:

1. Bring up support systems (controls, vacuum, diagnostics, cooling, etc.).
2. Adjust quadrupole currents to nominal values.
3. Condition rf cavities for high-voltage operation using short rf pulses.
4. With CW rf operation, adjust rf feeds for nominal cavity amplitudes and phases (no beam).
   - Heat cavities with local oscillators.
   - Bring cavities to operating frequency w/servo controlled cooling loops.
   - Lock rf generators to master oscillator frequency.
5. Tune ion source and LEBT with D^+ and H_2^+ beams using low energy beam calibration diagnostics.
6. With pulsed H_2^+ beam operation ($\leq$ 2% duty factor), tune 30, 35, or 40-MeV beam from RFQ and DTL using beamline diagnostics and feedback from diagnostics in high energy beam calibration station:
   - Measure and correct beam position and rf phase and amplitude errors, and
   - Adjust optical elements in HEBT to achieve correct beam position and shape.
6. Switch magnetic optics to deliver pulsed, low-power H_2^+ beam on lithium target to confirm the beam characteristics and position from previous observations with feedback from target diagnostics.
7. Switch to pulsed, low power D^+ beam on lithium target to confirm the beam characteristics and position from previous observations with feedback from target diagnostics.
8. Extend pulse width and pulse rate until full current CW operation while continuing to monitor the beam using the beam on target diagnostics.

If the accelerator is being turned on for the first time after a long shutdown, the full sequence will be required. However, for a routine maintenance period (e.g., a weekly 8-h shutdown, or few-hour shutdown scheduled by a component failure), most of the systems can be maintained in their operational states. This will include, for example, controls, vacuum, cooling, and very likely most of the rf system (except those stations which will need replacement or repair). Consequently, after a short shutdown, many operations will not be necessary and the above sequence can be abbreviated. Indeed, if the accelerator is to be restarted after only a short shutdown (below), then only steps 7 and 8 may be required. In this case, the beam will be restarted in 1-2 min.

When the beam is in pulsed operation, there may be a requirement to avoid thermally shocking the lithium target by introducing the full beam power instantaneously. To avoid this possibility, the beam current will be linearly ramped up to full current and back down to zero current within the first and last 0.5 ms of each pulse. For example, at 2% duty factor, with a pulse rate of 20 Hz, the pulse form will be tailored to approximate the profile shown in Fig. 2.6.3-10

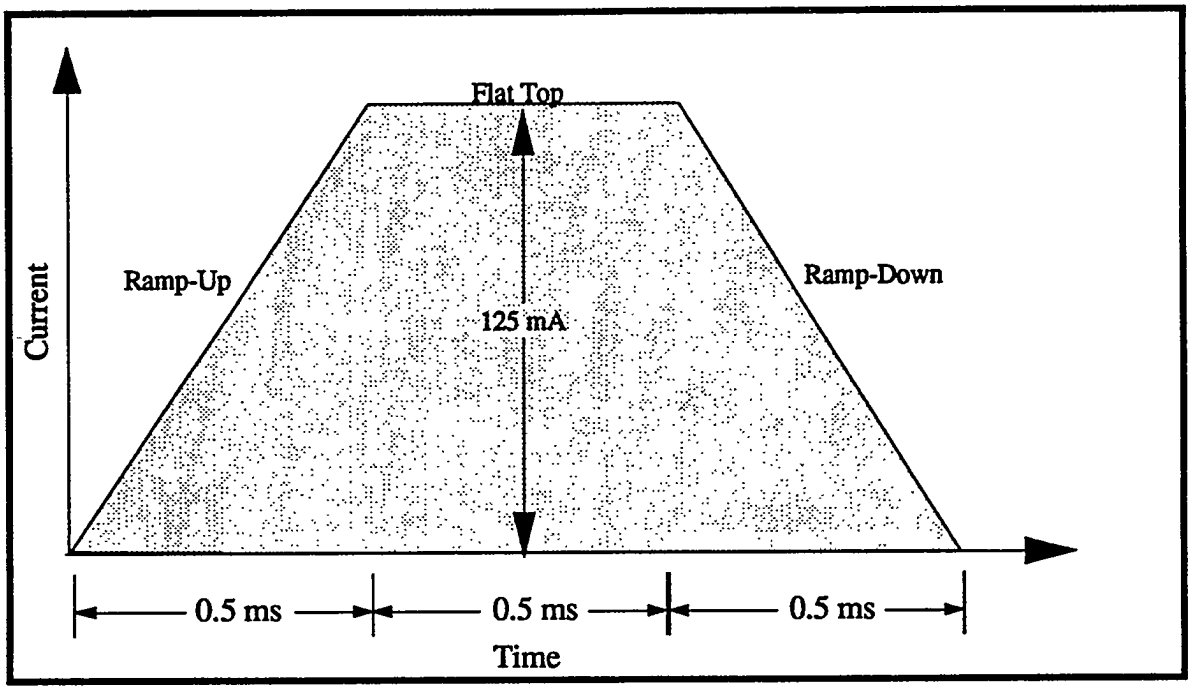

Fig. 2.6.3-10. Typical beam pulse form for 2% duty factor, 20-Hz operation.

As the duty factor is increased, the period of the flat top is increased while the pulse rate is held constant. For example, when the duty factor is 50%, the period of the flat top is 24 ms with the same ramp-up and ramp-down shown in the figure. Eventually, CW operation is obtained.

Alternative: The pulsed start-up method described above was selected as the baseline because it is more compatible to existing beam diagnostics for pulsed operation. However, it would also be possible to operate the beam CW under all circumstances, gradually increasing the current to full power. The final mode will be based on various considerations, such as whether retuning of the electromagnets in the beamline is required to minimize beam loss for different current levels.

2.6.3.1.2.4.2 Beam temporal characteristics during CW operation

Sources of ion injector current noise (~1 MHz) exist that, because of high frequency (>100 kHz), cannot be controlled. Under some conditions, the ion source noise might be magnified by the RFQ to a level estimated at ~10%[5]. However, these noise sources are much faster than time scales of thermal-hydraulic importance. Therefore, from the perspective of the target lithium flow, they will average to zero.

Slower variations will be controlled by utilizing modern volume plasma ion injectors (ECR or RF-type) and closed-loop control techniques. Average beam current noise during normal operation is not expected to exceed 1-2%.

2.6.3.1.2.4.3 Routine beam interruptions

Ion source changeover is expected to be required with a frequency between once per day (current technology) and once per week (expected capability) if the rf-antenna-driven source is used, or longer if the ECR source is used. However, in nearly all instances, this operation will be performed in a pre-planned manner with the spare source conditioned, brought up, and stabilized at low current before the operating source is switched off. The switching operation involves a change of polarity of the switching dipole (with degaussing as required) and gradual ramping of the beam current to the full value. The beam downtime

during the source switching operation performed in this fashion is expected not to exceed 1 min.

Other routine intermittent beam interruptions experienced by virtually all high-power rf linacs include: ion source arcing, high-voltage sparking in the rf system, high VSWR in the rf transmission lines, etc. In many cases, these interruptions will require that the beam be shut down (below), the problem diagnosed, and the accelerator restarted. In most instances operator intervention will not be required and the system can be restarted automatically (above) in ~1-2 min following the beam interruption. Based upon actual operating experience in similar accelerator systems[7] a realistic goal for high-voltage sparking in the rf system and injector can be ~10/d, resulting in an ~1% loss in system availability. This will require that all components be well screened, monitored, and conditioned to high electric fields prior to and during service.

2.6.3.1.2.4.4 Accelerator shutdown

Accelerator shutdown will be accomplished by turning off the beam production at the extractor of the ion source. In this situation, the beam current from one accelerator will be reduced from full power to zero power in about 10 μs.

Depending on the intended duration of the shutdown, the other accelerator subsystems will be left on or also turned off. The main concern during the beam shutdown is to assure personnel safety. A combination of controls and electrical and physical interlocks shall be employed to assure that the beam is not accidentally delivered to the target or other locations that would constitute a safety hazard.

There will be a wide range of fault conditions that will force the accelerator to be shutdown, with different responses depending on the exact nature of each fault condition. Loss of vacuum in the target area, for example, will result in an immediate beam abort, while other situations may only produce a warning on the control console.

2.6.3.1.3 Thermal control

As discussed in Section 2.6.3.1.2, the beam profile is tailored in both the horizontal and vertical directions. With the exception of a very small fraction of the beam that could heat surfaces adjacent to the target to a specified level of 20 W/cm^2, the beam energy is entirely deposited in the target. A summary of the required levels of heat removal with both beams operating at full current is as shown in Table 2.6.3-3. In the table, it has been assumed that a peak/average heating rate, including both spatial variations over the 5 cm x 20 cm flat top of the vertical profile and temporal variations, of ~15% should be anticipated. However, it is not anticipated that the total power will exceed 10 MW.

Table 2.6.3-3. Beam power deposited in target.

Beam Energy	30-MeV	35-MeV	40-MeV
Flat top area (cm^2)	100	100	100
Flat top power (MW)	6.25	7.29	8.33
Average power flux over 5 x 20 flat top (W/cm^2)	62,400	72,800	83,200
Peak power flux at horizontal edge (W/cm^2)	71,700	83,700	95,700
Total area including vertical edges (cm^2)	110	110	110
Total power (MW)	7.50	8.75	10.0

2.6.3.1.4 Vacuum interface

As they expand to their final size, the four deuteron beams are contained within four individual, rectangular beam ducts, that are joined to form one larger beam tube down-stream of the final shield wall immediately before the target. Therefore, during normal operation, the beam lines and target share a common vacuum boundary.

Two sets of normally open valves are used to isolate the beamline from the target during normal maintenance and fault conditions. The first, a set of fast closing valves (~10 ms time scale), are located in a narrow section of each beam duct immediately downstream of the final energy dispersion cavity. These valves are required to isolate the accelerator beamline in the event of a rupture of vacuum containment or lithium intrusion propagating from the target. The second, a set of larger gate valves, is located in each rectangular beam duct, immediately upstream of the final shield wall. These valves are required to prevent lithium contamination of the beamline during maintenance operations.

Flanges, located immediately downstream of the gate valves, constitute the physical boundary between the accelerator beamline and the target.

An ion vacuum pump will be located in each beamline between these two valves. Because this final pump will be a component of the tritium cleanup system, it will be the responsibility of the Target Facility or Conventional Facilities.

Accelerator beamlines generally require operating pressures less than 10^{-5} torr to avoid beam scattering that could potentially lead to beam loss and induced activation of the beam tube. In addition, lower operating pressures, less than 10^{-6} torr , will be required to avoid high-voltage electrical breakdown in the high field rf cavities located ~12-m upstream of the target. Therefore, to provide an adequate design margin during normal operation, the target facility will be required to control vacuum pressure at the interface (immediately downstream of the gate valve) such that the pressure is no higher than 10^{-6} torr .

The projected peak IFMIF target surface temperature, ~300°C, satisfies this condition nearly identically. It is further expected that there will be sufficient cold surfaces in the target/beam expansion tube area to maintain the lithium pressure at very low levels, even if the lithium surface temperature were to increase above 300°C.

2.6.3.1.5 Control/safety interface

The control/safety interface encompasses those control functions that are required to ensure that in the event of off-normal operating conditions, adverse health consequences for operating personnel and the public are avoided, and the IFMIF facility is protected from serious damage and/or loss of operability. In this context, there are three principal considerations: (1) overheating in the target because of a loss of target thermal hydraulic performance (either loss of flow or abnormal flow), (2) overheating in the target because of abnormal beam profile or position, (3) loss of integrity of the target containment structure that provides the vacuum boundary and contaminant isolation for the beamline.

To prevent adverse consequences (e.g. beam melting of adjoining structure) each of these conditions will require that the beam be shut down and the beamline isolated. In general, beamline shutdown will be accomplished by triggering the accelerator fast protect system, which will be capable of controlling the ion source extractor to terminate the beam in ~10 μs. Upon confirmation of beam termination, the accelerator fast protect valve, located near the dipole magnet in the beam expansion tube, will be closed to isolate the beamline from the target in ~10 ms. Following this, the accelerator and target will follow normal shutdown procedures, including shutdown of the large gate valve(s) that form the physical interface between the accelerator and target.

The onset of target overheating because of loss of target thermal-hydraulic performance must be recognized by the target diagnostic system[7], which will be required to trigger the accelerator fast protect circuit. To minimize complexity and control delay, this interface will not pass through the central control system. It will be a direct link between the target diagnostic system and the accelerator fast protect system.

The onset of target overheating because of abnormal beam performance can, in most cases, be sensed by the beamline diagnostic system which will utilize rf field monitors, beam position monitors, magnet power supply current monitors, beam scrapers, nuclear radiation

detectors and other diagnostic devices to sense abnormal performance before it affects the target. In such cases, the accelerator fast-protect system would be triggered, the above sequence would be followed, and the problem would be corrected before the beam would be restarted.

There is, however, the possibility of abnormal beam performance (e.g., abnormal beam particle distribution), which can not be readily or quickly deduced by the beamline diagnostic system. These conditions must be recognized by the target diagnostic system, which must trigger the accelerator fast-protect system before the onset of damage.

A loss of integrity of the target containment structure will be sensed by the vacuum control diagnostics in both the target and accelerator. Each would be expected to trigger the accelerator fast-protect system, which would terminate the beam, then shut the fast isolation and large gate valves.

2.6.3.1.6 Maintenance interface

After system shutdown and closure of the fast-isolation and large gate valves, which provide redundant separation between the accelerator and target, the maintenance of each of these facilities can proceed unimpeded by the interface. Prior to beam start-up, the target system availability, including adequate vacuum conditions for beam operation, must be confirmed.

2.6.3.2 Interfaces between the Accelerator and Test Cell Facilities

The accelerator beamline includes the IFMIF accelerators and all supporting subsystems, specifically including, but not limited to, the HEBT system, the beam expansion and imaging system, and the beamline vacuum and other environmental control systems. The final component of each beamline is the beam expansion tube, which terminates at the target interface. There is no physical interface between the Accelerator and Test Facilities. The only direct interface between the accelerator and the test modules involves the control/safety function. This interface is described below.

It should be noted, that the deuteron beam interfaces between the accelerator and target, which are described in Section 2.6.3.1.2, will determine the target performance. Therefore, they are also of primary interest to the test cell design.

2.6.3.2.1 Control/safety interface

The control/safety interface encompasses those control functions that are required to ensure that in the event of off-normal operating conditions, adverse health consequences for operating personnel and the public are avoided, and the IFMIF facility is protected from serious damage and/or loss of operability. In this context, there are three principal considerations: (1) overheating in the test assembly because of loss of test assembly thermal-hydraulic performance (either loss of flow or abnormal flow), (2) overheating in the test assembly because of abnormal beam profile or position, (3) loss of integrity of the test assembly containment structure, which could lead to overheating in the test assembly and/or compromise the target containment structure.

To prevent adverse consequences (e.g., beam melting of adjoining structure) each of these conditions will require that the beam be shut down by triggering the accelerator fast protect system, which will be capable of controlling the ion source extractor to terminate the beam in ~10 μs. Following this, the system will follow normal shutdown procedures, including isolation of the accelerator from the target.

The onset of test assembly overheating due to loss of test assembly thermal hydraulic performance must be recognized by the test assembly diagnostic system, which will be required to trigger the accelerator fast protect circuit. To minimize complexity and control delay, this interface will not pass through the central control system. It will be a direct link between the test cell diagnostic system and the accelerator fast-protect system.

The onset of test cell overheating because of abnormal beam performance can, in most cases, be sensed by the beamline diagnostic system. In such cases, the accelerator fast-protect system would be triggered, the above sequence would be followed, and the problem

would be corrected before the beam would be restarted. There is, however, the possibility of abnormal beam performance (e.g., abnormal beam particle distribution), which can not be readily or quickly deduced by the beamline diagnostic system. These conditions must be recognized by the test cell diagnostic system, which must trigger the accelerator fast-protect system before the onset of damage.

A loss of integrity of the test cell containment structure will be recognized by the vacuum control diagnostics in the test cell, which will be required to trigger the accelerator fast-protect circuit, which would terminate the beam, then isolate the accelerator.

2.6.3.3 Accelerator/Conventional Facilities interface

The accelerator interface with conventional facilities concerns the physical and functional connectivity with the physical plant, the support service systems and the instrumentation and control substations and central computer. The physical plant interface addresses mechanical support, alignment, shielding, access/handling, and safety. The support systems address utility services and consumables.

Tables 2.6.3-4, -5, -6, -7, -8 and -9 summarize the physical and support system interfaces between the accelerator subsystems and the associated conventional facility areas (buildings) that house them. Other qualitative and quantitative requirements are discussed in Sect. 2.6.3.3.1 and 2. Sect. 2.6.3.3.3 identifies and begins to characterize a special concern, the radiation protection interface.

Table 2.6.3-4. Accelerator vault interfaces.

Accelerator Vault	Value	Detail/Comment
Dimensions:		
Minimum length	49 m	
Minimum width	12 m	
Minimum height	8 m	
Rf power penetrations:		
Number	9	
Size	19 in.	
Location	distributed from above	
Cooling water:		
Total dissipated power removed	4 MW	
Number of heat exchangers	7	
Flow rate	200 L/min	
Temperature range	30-40° C	
Electrical power:		
Voltages	480/220/110 V	
Power levels	0.2 MVA	
Access:		
Minimum portal width	3 m	
Minimum portal height	5 m	
Crane capacity	25 ton	
Remote maintenance requirement?	source antenna	
Shielding requirement/criteria?	source/injector area	
HVAC requirement/criteria?		

Table 2.6.3-5. Beam turning vault interfaces.

Beam Turning Vault	Value	Detail/Comment
Dimensions:		
Minimum length	56 m	
Minimum width	29 m	
Minimum height	8 m	
Rf power penetrations:		
Number	1	
Size	19 in.	
Location	endwall	
Cooling water:		
Total dissipated power removed	0.3 MW	
Number of heat exchangers	1	
Flow rate	2700 L/min	
Temperature range	30-40° C	
Electrical power:		
Voltages	480 / 220 volt	
Power levels	0.64 MVA	
Access:		
Minimum portal width	3 m	
Minimum portal height	3 m	
Crane capacity	7.5 ton	
Remote maintenance requirement?	no	
Shielding requirement/criteria?	back-stream shielding	
HVAC requirement/criteria?	yes	

Table 2.6.3-6. Beam steering vault interfaces.

Beam Steering Vault	Value	Detail/Comment
Dimensions:		
Minimum length	8 m	
Minimum width	29 m	
Minimum height	8 m	
Rf power penetrations:		
Number	n/a	
Size	n/a	
Location	n/a	
Cooling water:		
Total dissipated power removed	not significant	
Number of heat exchangers	n/a	
Flow rate	n/a	
Temperature range	n/a	
Electrical power:		
Voltages	n/a	
Power levels	n/a	
Access:		
Minimum portal width	3 m	
Minimum portal height	3 m	
Crane capacity	n/a	
Remote maintenance requirement?	yes	
Shielding requirement/criteria?	Deuterium, neutron	
HVAC requirement/criteria?	yes	

Table 2.6.3-7. Final beam calibration dump interfaces.

Final Beam Calibration Dump	Value	Detail/Comment
Dimensions:		
Minimum length	4 m	
Minimum width	3 m	
Minimum height	2.5 m	
Rf power penetrations:		
Number	n/a	
Size	n/a	
Location	n/a	
Cooling water:		
Total dissipated power removed	0.2 MW	
Number of heat exchangers	1	
Flow rate	300 L/min	
Temperature range	30-50° C	
Electrical power:		
Voltages	n/a	
Power levels	n/a	
Access:		
Minimum portal width	hatch	
Minimum portal height	n/a	
Crane capacity	n/a	
Remote maintenance requirement?	yes	
Shielding requirement/criteria?	Deuterium	
HVAC requirement/criteria?	yes	

Table 2.6.3-8. RF power room interfaces.

RF Power Room	Value	Detail/Comment
Dimensions:		
Minimum length	43 m	
Minimum width	21 m	
Minimum height	5 m	
Accelerator rf power stations:		
Number	9	
Minimum length	16 m	
Minimum width	3 m	
Minimum height	3 m	
Total dissipated power removed	0.8 MW	
Number of heat exchangers	1	
Flow rate	700 L/min	
Temperature range	30-40° C	
Electrical power voltages	4160 volt	
Electrical power levels	1.8 MW	
Access:		
Minimum portal width	3 m	
Minimum portal height	3 m	
Crane capacity	10 ton	
Remote maintenance requirement?	no	
Shielding requirement/criteria?	high-voltage protection	

Table 2.6.3-9. Auxiliary power room interfaces.

Auxiliary Power Room	Value	Detail/Comment
Dimensions:		
Minimum length	43 m	
Minimum width	21 m	
Minimum height	5 m	
HEBT rf power stations:		
Number	2	
Minimum length	16 m	
Minimum width	3 m	
Minimum height	3 m	
Total dissipated power removed	0.8 MW	
Number of heat exchangers	1	
Flow rate	700 L/min	
Temperature range	30-40° C	
Electrical power voltages	4160 volt	
Electrical power levels	1.8 MW	
Accelerator cooling water:		
Total dissipated power removed	n/a	
Number of heat exchangers	n/a	
Flow rate	n/a	
Temperature range	n/a	
Magnet power supplies		
Number of racks	15 HEBT Dipoles	10 Quads
Dimensions	1 x 1 x 2 high m	1 x 1 x 2 high m
Elec. Power requirements	0.6 MVA	0.4 MVA
Cooling requirements	900 L/min	600 L/min
Diagnostic/control racks		
Number of racks	16	
Dimensions	1 x 1 x 2 high m	
Elec. Power requirements	TBD	
Cooling requirements	n/a	
Access:		
Minimum portal width	3 m	
Minimum portal height	3 m	
Crane capacity	10 ton	
Remote maintenance requirement?	no	
Shielding requirement/criteria?	no	

2.6.3.3.1 Physical plant

The plant provides the work area conditions for the accelerator, the test cell, support areas, office areas, and maintenance of equipment. This interface includes:

- mechanical/structural-support structure (e.g., piers, framework, legs, hangers, cable conduits/trays) for static and dynamic (seismic) stability to protect components during all normal and off-normal states and to preserve alignment; survey monuments and markers for beamline alignment; grounding provisions for subsystems to electrically conducting structure, typically < 25 ohms path to ground (NAC 250);
- protective structures (DOE Order 5480-11)-rf and other EMI, providing equipment and area shielding for instrumentation and personnel; neutron shielding (heavy concrete) providing radiation protection for HEBT area to limit equipment activation and for

protection of maintenance personnel; electrostatic potential cage structures, providing hazard protection from high-voltage equipment;

- access and handling-providing access and lift capacity for installation, maintenance, disassembly;
- HVAC-conditioning and control of ambient atmosphere (70 ± 5° F in office areas, 75 ± 5° F in machine areas); ventilation of work areas; containment and exhaust of activated gases; negative pressure in accelerator areas; over pressure relief ports to exhaust;
- safety-sensor and signal transmission to plant and central control for personnel entry, accelerator and test cell fault detection, fire detection and control, explosive or toxic gas detection, radiation detection of RF, gamma, neutron and x-ray emissions, hardwire interlocks and relays, logic interlocks to central I&C; and
- security-authorized personnel access, document and data storage, limited access to computer communications, facility networks, data transmissions.

2.6.3.3.2 Support services

The support systems as part of the facility requirements, provide the continuous operating consumable utilities, define an interface between the plant and the device and operating areas:

- prime power-provides conditioned and controlled power to subsystem supplies, rf supplies, magnets, pumps, chillers, actuators, motors, diagnostics, computer substations and other accelerator requirements, lighting, safety interlocks, and capability to monitor distribution status; distribution of power at 13.2 kV, 480/277 V, 208 V, 120 V, 3 phase, 60 Hz; uninterruptable power supply for 30 min transition; emergency power generator, start-up < 20 s, 208 V, 3 phase, 60 Hz for pumps, 120 V for control and safety circuitry; circuit protection; signal and power cabling;
- thermal control-provides distributed cooling water to components and heat exchangers nominally at 20° C, pH level 6.5-7.5, resistivity = 10 K ohm cm minimum, particulate size ≤ 10 microns, hardness < 60 mg/L calcium carbonate; provides monitoring sensors to subsystem and Central I&C; provides hardwire interlocks, logic interlocks and relays;
- pressurized air-provides high pressure air (90 psi, 0.5 in. lines) for cooling fluid valve actuation, rf drive loop cooling, safety relay actuation, maintenance equipment.

2.6.3.3.3 Radiation protection interface

The major radiation sources in the accelerator vaults include:

- primary prompt neutrons produced by the interaction of deuteron beam loss with accelerator components,
- secondary prompt neutrons produced in the lithium target that stream back through the beam tube,
- secondary prompt gamma rays from scattering and absorption of the prompt neutrons,
- prompt X-rays from the injector, and
- delayed gamma rays from neutron- and deuteron-activated components and neutron activated coolant and air.

The level of prompt radiation determines the requirements for the shield walls that surround the accelerator vault, as well as the sizing of penetrations into the vault. The level of delayed radiation determines accessibility and local shielding requirements for maintenance of components internal to the vault.

As illustrated in Section 2.6.3.1.2.3, it is herein assumed (subject to demonstration through detailed shielding analysis) that the secondary prompt neutrons produced in the lithium target which stream back through the beam tube, can be sufficiently attenuated through the judicious use of:

1. distance,

2. bulk shielding,
3. neutron collimators (to reduce the view angle), and
4. compartmentalization (to separate hot areas from accessible areas).

As a result, nearly all of the beamline elements, with the possible exception of the final elements of the beam imager, dipole and energy dispersion cavities will qualify for "hands-on" maintenance. (In the above and following discussion, hands-on maintenance is defined to be *maintenance without using remote manipulators*. Local shielding, special handling or tooling such as long-reach instruments and limited access for personnel are within the definition of hands-on maintenance.)

The remaining radiation sources, which arise from beam loss, are strongly affected by the amount of loss, the energy of deuterons that are lost, and the location of the losses. The neutron yield from beam loss also depends on the target material and the angle of incidence.

At the current level of design it is prudent to take the following steps with regards to estimating the beam loss, and its consequences for the design:

- estimate the maximum beam loss conservatively;
- tune-up the beamline at lowest relevant power level (initially ~0.01% duty factor) for shortest possible time;
- maximize use of H_2^+ for tune-up operations;
- closely monitor radiation levels during deuterium operation;
- design facility shielding/penetrations for maximum loss;
- design accelerator components in all aspects for compatibility with remote maintenance, but do not design or procure remote maintenance fixtures and equipment, except for those (HEBT) components intercepting back-streaming neutrons from the target (the FMIT solution[8]).

In this context, it is estimated that the maximum average beam loss will be ≤ 3-mA/m along the DTL and the straight sections of the HEBT. The maximum average point loss is predicted to be 10-mA at the HEBT bending magnets and the final three focusing magnets. These losses produce the most radioactivity. For example, Table 2.6.3-10 indicates the dose rates from 3-mA/m losses for 0.01% duty factor operation[9]. These doses will scale linearly for larger duty factors or larger/smaller current losses. They indicate that, for CW operation without local shielding, the current loss must be three orders of magnitude lower.

Table 2.6.3-10. Dose rates at 30 cm from 3-mA/m losses of 35 MeV deuterons on copper (0.01% duty factor operation).

Time after shut down (h)	Dose after 30-d irradiation (mrem/h)	Dose after 300-d irradiation (mrem/h)
0	6.3	6.9
1	1.7	2.2
8	0.6	1.1
24	0.3	0.8
720 (1 mo.)	0.1	0.6

A ~3 nA/m beam loss goal, in accordance with the above requirement, is consistent with design expectations for the next generation of rf linacs. Similarly, the average point loss at the HEBT bending magnets and the final three focusing magnets should be on the order a few nano-amps.

These loss predictions are based on the losses observed in operating linear accelerators, especially LAMPF, and on the improvements expected to accrue from the design features of the IFMIF. The bases [10-13] for the projected beam loss are as follows:

- The accelerator is designed to minimize beam loss.

- The predicted beam loss is compatible with an extrapolation of the beam loss measured on the LAMPF accelerator. [This includes accounting for the pulsed nature of LAMPF, where about half the observed losses are from leading edge pulse transients (whereas IFMIF will be operated CW).]
- Computer simulation of the linac and HEBT performance indicate that beam losses below the stated limits are obtainable.
- Understanding of beam halo formation and beam losses in intense linacs has improved on a fundamental basis. Work is in progress to formulate design techniques to further minimize losses.

The lower energy portions of the accelerator will experience losses that are much greater in magnitude, but the radiation implications are less well understood. For example, a loss of 15-mA of 0.1-MeV deuterons is projected for the LEBT section and another 10-15-mA is expected to be lost in the low energy section (<2-MeV) of the RFQ. The principal issue here, D-D reactions between the incoming beam and deuterium ions embedded in the surface of the copper structure, producing ~2-MeV fusion neutrons, requires evaluation.

It is also expected that ~1-mA of deuterium could be lost at 2-8-MeV energies over the ~10 m length of the RFQ. These deuterons, which have energy exceeding the threshold for neutron stripping, represent an additional potential source of machine activation that requires evaluation.

If, on evaluation, LEBT and/or RFQ activation is demonstrated to be problematic, then the likely solution will be to remove active components (e.g., rf windows, vacuum pumps) from proximity of the RFQ and to employ a gamma shield surrounding these components. This will allow for access to the ion sources when the accelerator is shut down. Ion source maintenance during operation (i.e., to replace rf antenna or window in redundant ion source) will then require remote or robotic equipment.

Finally, it is noted that strict administrative control of the operation and maintenance of the accelerator must be maintained in order to achieve the required low level of beam loss.

2.6.3.3.4 RF coax drive penetrations

The rf power amplifiers transmit power via 19 in. coax lines through the shielding wall to the accelerator. Routing of the coax must be designed to prevent radiation through the shield penetration.

2.6.3.3.5 Access to accelerator

Air control is required. During operation, air is confined in the radioactive air confinement system. For maintenance access, ventilation and access procedures TBD.

2.6.3.3.6 RF Halls Maintenance Procedures

Investigation is required of trade-offs between crane handling and air-pad handling, in terms of maintenance procedures, availability, and building cost.

2.6.3.3.7 RFQ and linac tanks removal and maintenance (TBD)

2.6.3.3.8 Beam turning hall component removal and maintenance (TBD)

2.6.3.4 Accelerator/central computer control interface

The accelerator interface with I&C concerns the functional connectivity which addresses command for operations and set points, time synchronization, data access and retrieval, diagnostics and logic interlocks for fast beam interrupt and other safety configurations. The accelerator I&C comprises the component level computer systems and transmission network, and the hardware and software necessary for individual accelerator subsystem (Injector, RFQ, DTL, HEBT) control, measurement and diagnostics. Each station provides for operator interface and data capture and retention; provision for automatic and pre-programmed operation; provision for safety monitoring and control.

2.6.3.4.1 Central and subsystem control

The I&C interface allows for accelerator subsystem and integrated beamline testing, conditioning, and operation supported by the conventional facilities of the plant, and fully protected by all safety provisions. The controller interface functions at the accelerator substations are:

- provide local, as well as, centralized operator control and monitoring of subsystems; power supply, gas supply, vacuum, coolant control, and diagnostics,
- provide operator and instrumentation interface to distributed beamline diagnostics,
- provide LAN connectivity to other accelerator subsystems through the central computer, and
- provide automatic and operator control and monitoring of equipment and, through the central station, system safety interlocks-both logic and hardwired, and access controls to provide an integrated safety system incorporating a plant interlock system, a personnel access interlock system, and a fast-protect interlock system.

Performance:

- For monitoring signals from actively controlled devices: $\geq$4/s
- For monitoring all other instrumented devices; $\geq$2/s

2.6.3.4.2 Instrumentation and diagnostics

Diagnostic hardware and software provide visibility to facility status, accelerator, and Test Cell operations, and safety conditions. Accelerator diagnostics affords the specific function of beam characterization, testing,, and monitoring by on-line measurement of parameters such as beam current transmission, emittance growth, beam energy and phase, and supplies the data for a coordinated safety evaluation and response. The implementing instrumentation includes sensor monitor and measurement capabilities and safety inhibit and response actuation.

In addition to direct measurement of operational parameters, there will be internal direct-acting diagnostic response systems:

- Plant interlock system providing direct actuation to vacuum pressure and coolant status trigger signals, response time = 20-50 ms, typical;
- Personal access safety system limiting area access during operation and fault conditions; and
- Fast beam interrupt system providing direct beam system control to controller signals of beam position, cavity over-temperature, or rf to trigger response configuration. Implemented over fiber-optic duplex link, typical response times for:
  - excessive beam spill or misalignment, radiation level exceeding specification, 10 μs, reapplied in 100 ms,
  - excessive temperature rise in cooling system, 100 ms.

Accelerator instrumentation is afforded in a full complement of direct and implicit sensors:

- beam characterization-current toroid, scanner, beam emission diagnostic, laser emittance scanner, striplines, calorimeters, ionization tubes and gauges, scraper pickups, residual gas analyzer, cavity temperature sensors (thermocouples), IR camera, beam position diagnostic sensor, capacitive pickups, spark detectors;
- source-gas load, temperature and internal pressure, beam alignment sensors, solenoid power level and temperature;
- rf power-cavity field level pickup loops for rf field phase and amplitude control, forward and reflected power signals, X-ray end point monitor to calibrate rf field voltage;
- support services, slow sampling analog gauging-inlet/outlet coolant pressure, inlet/outlet coolant temperature, coolant flow rate, vacuum pressure, high-pressure discrete valve status indicators for coolant, vacuum, exhaust;
- power distribution and content indicators-prime power, rf power, magnet power, auxiliaries (power supplies, computers, etc.) gauging, ground indicator;
- status panels for accelerator subsystems and utility services, interlocks; and
- signal conditioning and lines.

2.6.4 Safety Considerations

2.6.4.1 Safety Analysis Technique

The safety considerations of the accelerator facilities should be carried out by using a concept and an analysis methodology common for all other subsystems. A major concept acceptable for the general cases including the IFMIF facility is ALARA (As Low As Reasonably Achievable) philosophy. The conceptual design must provide an achievable safety level at the present status of the technology and the key issues from the safety analysis that could affect safety severely. The method of the safety analysis employed in the report is:

- to depict the hazard modes,
- to estimate the scenarios of the path from the failures to the accidents, and
- to assign the frequency of the occurrence and the severity of such scenarios.

As a result, a preliminary FMEA for the accelerator facilities and related areas is prepared according to the FMEA factor descriptions given in Table 2.5.4-1. No quantitative analysis is made, and only possible causes and effects of hazardous events are identified and evaluated.

2.6.4.1 Hazard Identification

In the case of the accelerator facilities, the major hazards originate from

- ionizing radiation sources,
- non-ionizing radiation sources,
- electrical hazards,
- chemical hazards,
- mechanical hazards,
- fire and explosion hazards,
- low oxygen hazards, and
- beam hazards.

2.6.4.1.1 Ionizing radiation sources

Two separate radiation fields, prompt and remnant, can be considered as the ionizing radiation sources produced in the accelerator facilities. Prompt radiation is directly associated with the beam-on condition and is subdivided into three kinds of sources: primary (particle beam), secondary (neutron and gamma generated at target by beam), and stray (neutron, gamma, and X-ray along with the accelerator components). Remnant radiation is a result of the activity produced and accumulated during the history of the operation, which remains after the beam shutdown.

2.6.4.1.1.1 Prompt primary radiation

Direct exposure to the deuteron beam for the operating personnel would be very hazardous, but is essentially precluded by thorough exclusion of personnel from the accelerator halls during operation, by sweep procedures and emergency scram system, and by containment of the deuteron beam in the beam transport system.

2.6.4.1.1.2 Prompt secondary radiation

Direct exposure to the neutron flux generated at the lithium target and tune-up beam stop would be very hazardous, but is essentially precluded by thorough exclusion of personnel from the beam turning hall during operation by sweep procedures and emergency scram system.

2.6.4.1.1.3 Stray radiation

As the beam loss can not be suppressed completely, a small amount of the beam collides with the accelerator components and produces neutron and gamma radiation. Other possible sources of lesser importance can arise from deuterium, tritium, and lithium absorbed at the surface of the beam line components. The beam loss criterion is the critical issue determining the sufficient shielding.

X-ray radiation will occur at the injector and the rf cavities, especially at the tune-up stage. The ion source component replacement during the operation of the other source is potentially hazardous.

2.6.4.1.1.4 Remnant radiation

Radioactive materials are generated by stray radiation in the accelerator structure and the air inside the vaults.

2.6.4.1.2 Non-ionizing radiation sources

Accelerator facilities produce other types of radiation that have no capability of ionization of the atoms and molecules, such as magnetic fields, rf power, and thermal exposure.

2.6.4.1.2.1 Magnetic fields

Magnetic fields at the area accessible to personnel is limited to a few gauss by the design of the magnets, and no significant exposure is expected. This possibility is excluded in the conceptual design.

2.6.4.1.2.2 RF system

RF fields are confined in metal enclosures to minimize the personnel exposure. The exposure limit of 1 mW/cm^2 can be achieved by monitoring the rf power leakage.

2.6.4.1.2.3 Thermal exposure

Hot and cold components of the accelerator facilities may cause minor personnel injury by contacting them unintentionally. Possible hot sources are oil in pump station, baking heater around beam tube, etc. Possible cold sources are coolant of the refrigeration system, liquid nitrogen, liquid argon, liquid helium, etc. Heat shields can be used to minimize the hazards.

2.6.4.1.3 Electrical hazards

The hazard because of electrical shock can be minimized by employing the proper insulation, interlock, enclosure, and grounding design and procedures. Typical sources of electrical hazards are ion injector high-voltage, ion pump power supplies, and high current sources used for magnets or rf amplifiers.

2.6.4.1.4 Chemical hazards

Possible chemical hazardous sources are electrolytic capacitor chemicals and water treatment chemicals. Electrolytic capacitor chemicals present a potential source of minor injury to personnel because of their corrosive properties. However, they are used in a closed system and personnel contact is extremely unlikely. Water treatment chemicals may contain toxic elements; however, the quantities are limited to flushing of the accelerator cooling system and are used in a closed system.

2.6.4.1.5 Mechanical hazards

The potential for personnel injury as a result of mechanical hazards is the same as the typical industrial hazards, including falling from heights, crane operation, energy release from broken pressurized line, and contact with operating fans or motors.

2.6.4.1.6 Fire and explosion hazards

Potential sources of fire or explosion include oil in the vacuum pump or transformers, epoxy potting, cabling, electronic equipment, hydrogen gas build-up, and pressurized gas container. The consequences from these sources should be analyzed in the section on accident scenarios.

2.6.4.1.7 Low oxygen hazards

Leakage from the pressurized inert gas or inert liquid containers can be sources of low oxygen hazards.

2.6.4.2 Accident scenarios

Some hazards given above have potential consequences to the operating personnel and the public outside the facility. Two distinct types of accidents are identified: operational accidents and natural disaster related accidents.

2.6.4.2.1 Beam accidents

Accidental beam loss and the radiation induced by such incident require special operating procedures to be written and scrupulously followed at the time. Accident scenarios include:

- failure of beam to shut off; beam delivery actually on target as expected;
- failure of beam turning element plus failure of beam shut-off fast-protect system;
  - LEBT bending magnet;
  - 90 degree bend in beam turning hall HEBT;
  - final neutron-backstreaming control bend in HEBT;
  - beam steering magnet;
  - focusing elements;
- abnormal beam spot on target;
- failure of energy dispersion cavity;
- abnormal beam power deposit in the lithium flow ;
- accidental switching of beam from pulsed to CW mode; and
- failure of beam radiation monitoring system to detect abnormal beam loss and shut down beam.

2.6.4.2.2 Cooling water failure

Release of cooling water or temperature control off-normal could result in overheating of accelerator components, such as magnets, cavities, rf drives, and other components, beam stop, and pumps, causing secondary failures of these elements. Cooling water leakage could result in the release of water contaminated by radioactivity. In the case of leak to the target section, a water-lithium reaction could occur.

2.6.4.2.3 RF system failure

RF system failures occur by:

- failure of an insulator on rf transmission line, and

• failure of a gas barrier, or rf window, separating a transmission line from cavity.

Radiation exposure to personnel could occur during the repair time, especially at the high-energy section of linac and energy dispersion cavity.

2.6.4.2.4 Loss of power

The loss of electricity for all accelerator facilities is not expected to cause a critical hazard since the beam is shut down at that time. Careful considerations are necessary to shut down the beam properly in the case of local loss of electricity.

2.6.4.2.5 Loss of vacuum

Failure of the vacuum system during beam-on condition causes an unexpected beam loss because of the increase of the beam-atomic collisions. The reaction of the leaked gas with lithium may also occur. The severity of the accident is higher for the location near the target, (i.e., the final bend line and the other HEBT line).

2.6.4.2.6 Repair of activated components

Some accelerator components must be disassembled and repaired by personnel at the time of failure or during the maintenance period. Each activity level depends upon the history of the exposure of the external radiation and the accumulation of the radioactive nuclides transported from the other components. The repair modes are categorized according to the activity levels:

- Remove the elements by hands and repair outside of the accelerator area.
- Remove the elements by hands with a temporary local shield and replace with new ones.
- Remove the elements by remote handling and replace with new ones.

2.6.4.2.7 Fire and explosion

Potential sources of fire except for hydrogen gas build-up are minimized by usual engineered safety features. Hazards resulting from the gas accumulation should be further analyzed.

2.6.4.3 Key issues

The most probable and most severe accident originates from the prompt radiation caused by the unpredictable beam loss and the activation induced by such a radiation. This could result in exposure to personnel during repair or maintenance. The criterion of the beam loss and its control are critical to managing the safety issues in the ALARA philosophy.

The important factor, human error, is not taken into account in the current accident scenarios. It may be properly assessed in the course of the fault tree analysis.

2.6.4.4 Failure Modes and Effects Analysis

A preliminary FMEA factors table [14]. is outlined in Table 2.6.4-1 The key to the coded symbols is as follows:

Ease of Detection

A) Easy	- Immediately detected and alarmed
B) Limited	- Detected with delay or needs observation
C) Difficult	- No detection available

Frequency of Occurrence

A) Operational Events	- More than once per year
B) Likely Events	- 1/y~10^{-2}/year
C) Unlikely Events	- 10-2~10^{-4}/year
D) Extremely Unlikely Events	-Less than 10^{-4}/year

Risk Potential

I) Normal	Operational caution required
II) Danger	Limited function
III) Minor Hazard	Immediate halt and repair
IV) Major Hazard	Accident, damage of facility
V) Extreme	Possible environmental effect

Major risks most likely to occur are mainly related to beam control resulting from rf and rf component failure or beam transport failure. Many kinds of failures will arise from the cooling system failures, though most of them are unlikely events.

Table 2.6.4-1. FMEA factors.

Component	Purpose		Effect	Detection	Mitigation or Prevention	Freq	Risk
Ion Injector	Generate Deuteron Beam	Minor Instability - rf Antenna - rf Generator - Extractor @Normal	Exposure to Stray Radiation due to Beam Loss near Target	A. Beam Monitors - current - position B. Beam on Target profiler A. EF/HV Sen. A. Radi. Monit	- Local Shielding - Interlock - HEBT Design Tolerable for Fluctuations	A	I
		Major Instability - Feedback System Error - Gas Supply @Normal	Exposure to Stray Radiation due to Beam Loss along linac & HEBT	A. Beam Monitors - beam loss - position - current	- Local Shielding - Interlock - Robust Feedback Control	B	III
		On-line Repair / Replacement @Normal	Exposure to Prompt Radiation	A. Radiation Monitors	- Shielding - Remote Handling	A	II
		Duty-Factor Control Error @Off-Normal	Exposure to Stray Radiation or Loss of Vacuum due to Beam Stop Damage	A. Beam Monitors - current A. Pulse Beam Monitor	- Shielding - Interlock	B	III
		Magnet Failures - PS - Insulation - Cooling @Off-Normal	Exposure to Stray Radiation due to Beam Loss near LEBT, RFQ	A. Beam Monitors - current - position A. Rad. Monit.	- Interlock - Preventive Maintenance of Cooling System	B	II
		Ignition of D_2 or H_2 Gas @Accident	Fire or Explosion	A. Gas Monitors A. Fire Detect	- Proper Storage, Handling & Design	C	III
		Contact with HV PS / terminal @Normal, Mainten.	Electrical Shock	A. Visual, Verbal	- Enclosures - Grounding - Training - Interlock - First Aid Resp.	C	I

Component	Purpose		Effect	Detection	Mitigation or Prevention	Freq	Risk
RFQ System	Bunch & Accelerate Beam up to 8-MeV	Instability, Field Emission @Normal	Exposure to Stray Radiation	A. Beam Monitors A. Vacuum Gauges	- Interlock - Shielding	A	I
		Cavity / rf Drive Loop Failures - Cooling - Misalign @Off-Normal	Exposure to Stray Radiation due to Beam Loss	A. rf sensors A. Beam Monitors	- Interlock - Preventive Maintenance of Cooling System	B	II
		Contact with Activated Materials @Mainten.	Exposure to Remnant Radiation	A. Radiation Monitors	- Local Shielding	C	I
Drift Tube Linac	Accelerate Beam up to 30, 35, 40-MeV	Instability, Field Emission @Normal	Exposure to Stray Rad.	A. Beam Monitors A. Vacuum Gauges	- Interlock - Shielding	A	I
		DT Quads / Cavity / rf Drive Loop Failures - Cooling - Misalign @Off-Normal	Beam Loss & Radiation	A. rf sensors, A. Beam Monitors - Current - Position - Beam Loss	- Interlock - Preventive Maintenance of Cooling System	B	II
		Contact with Activated Materials @Mainten.	Exposure to Remnant Radiation	A. Radiation Monitors	- Local Shielding	C	I
High Energy Beam Transport	Turn, Merge & Control Beam Distribution	Instability @Normal	Exposure to Stray Rad. due to Beam Loss	A. Beam Monitors A. Vacuum Gauges	- Interlock - Shielding	A	I
		Magnet Failures - P S - Coil - Insulation - Cooling - Misalign @Off-Normal	Exposure to Stray Rad. Li Target Overload Loss of Vacuum	A. Power Sensor A. Flux Monitor A. Beam Monitors	- Interlock - Preventive Maintenance of Cooling System	B	II
		EDC Failures - rf drive / window - Cavity Cooling / Misalign @Off-Normal	Exposure to Stray Radiation, Li Target Overload, Loss of Vacuum	A. rf sensors, Beam Monitors	- Interlock - Preventive Maintenance of Cooling System	B	II
		Contact with Activated Materials @Mainten.	Exposure to Remnant Radiation	A. Radiation Monitors	- Local Shielding	C	I
RF Power Supplies	Supply rf power to linac & EDC	RF leakage @Normal & Mainten.	Exposure to rf power	A. rf monitors	- Preventing Maintenance -	B	I
		Window Failure - Thermal Stress - Metallic Coating Deposit @Accident	Loss of Vacuum Exposure to Remnant Radiation at Repair Time	A. Vacuum Gauges A. Radiation Monitors	- Preventing Maintenance - Vacuum System	B	IV
		Transmission Line Failure - Insulator @Off-Normal	Exposure to Remnant Radiation at Repair Time	A. Radiation Monitors	- Preventing Maintenance	B	III
Beam Dump	Beam Tuning at Start up	Heat Damage - Beam Prop. Change - Cooling @Off-Normal	Exposure to Stray Radiation due to Beam Loss	A. Temp. Sensors A. Radiation Monitors	- Interlock - Preventive Maintenance of Cooling System	B	III
Acc. Systems I&C	Instrumentation & Control	Out-of-Control @Off-Normal	Exposure to Stray Radiation due to Beam Loss	B. Limited Hard Wired Control	- Interlock - Redundancy	B	II or III
Component	Purpose		Effect	Detection	Mitigation or Prevention	Freq	Risk

Support Systems - Vacuum	Evacuate linac & beam line	Component Failures - Pump - Valve	Loss of Vacuum	A. Vacuum Gauges	- Interlock - Preventive Maintenance	B	III
		Power Failure @Off-Normal					
		Ignition of Hydrogen Buildup in Pump @Accident	Fire or Explosion	A. Fire Detectors	- Proper Storage, Handling & Design	C	IV
		Contact to Activated Components @Mainten.	Exposure to Remnant Radiation	A. Radiation Monitors	- Training	C	I
- Cooling	Cool down Magnets, Cavities, Beam dump, Instruments	Leak from Cooling System @ Accident	Release of Radioactive Cooling Water	A. Leak Sensors	- Proper Storage, Handling & Design	C	IV
		Contact to Treatment @Mainten.	Exposure to Toxic Chemicals	A. Visual, Verbal	- Training	C	I
- Air	Control Airborne Radioactivity Keep room temperature	Leak from Air Circulating System @Off-Normal	Exposure to Airborne Radioactive Materials (Air, Dust)	A. Air Monitors	- Limit Access - Control of Dust & Particulate	C	III
- Inert Gas & Liquid N_2, Ar, He	Supply Dry Atmosphere, & Refrigeration	Leak from Container @Off-Normal	Exposure to Low O_2 Environ.	A. Oxygen Monitors	- Interlock - Proper Storage, Handling & Design	C	III
		Access to Asphyxiates @Mainten.	Exposure to Ozone	A. Ozone Monitors	- Interlock - Training	C	I
		Invalid operation of Valves @Mainten.	Fire or Explosion	A. Gas Leak Monitors	- Training - Procedures	C	IV
Interface - Target Lithium Flow	Supply Target Materials	Beam Tube Failure - Air / N_2 intrusion to Lithium Target Area @Accident	Li-Air / Li-N_2 Reaction at Interface	A. Vacuum Gauges	- Testing - Preventive Maintenance	C	IV
		Boiling of Lithium Target @Accident	Lithium Vapor into Beam Line	B. Li Sensors in Beam Line	- Redundant Instrumentation - Fast Shut-off Valve	C	IV
Interface - Test Cell	Supply Irradiation Testing Area	Mishandling of Beam Line Selection @Accident	Beam Entering into Vacant Li Target & Test Cell in Preparation	A. Beam Monitors	- Interlock	D	IV

2.6.5 RAM Considerations

The accelerator system and its components shall be designed to minimize the system's downtime and to assure minimum availability of 88% during normal operation. This level is required by the consideration of the overall availability budget for the IFMIF facility. Beginning with the overall unscheduled availability required at 80.7%, the test system allocation of 97.5% and the target system allocation of 95%, one obtains, for the accelerator system, 87.1% availability requirement. Since there are two accelerators, and it is assumed that the two accelerators are always directing the beam to the same target, failure of one of the accelerators does not constitute an unavailability event for the IFMIF facility. Rather, half credit for operating with half of the current is taken. With this assumption, through application of the binomial theorem, one can derive the requirement for each accelerator at 87.1%. If, instead, failure of one of the accelerators was considered an unavailability, the availability requirement would go up to its square root value of 93.3%. Rounding up the 87.1% requirement, one obtains the above 88% availability goal for each accelerator.

The desired level of availability shall be achieved by first performing extensive design verification through testing and analyses on critical hardware and software. Redundancy shall be implemented where required and practical. Equipment that is expected to require replacement shall be designed for ease of maintainability. Diagnostics shall be provided to monitor the health of the system.

Failure mode relevant to the accelerator system is only of the FTO type associated with the beam-off condition. Depending on the frequency of occurrence, the failures will be categorized as routine, rare, and once in a lifetime. Events can further be categorized according to the severity of their impact on the facility as low impact, off-normal, and major. The goal of the design shall be to achieve an alignment of these two categories so that the major failure events will be expected to occur once-in-a-lifetime or less frequently.

Availability studies have been performed in the past for the FMIT system design[15,16]. In some cases, these have been supported by experiment and on-line usage, but data will need to be updated in the next design phase of IFMIF.

2.6.5.1 Reliability

Detailed analysis of accelerator reliability was performed in the IFMIF CDA study. The analysis used failure rates for major components based on the information available from vendors, previous studies where applicable, and engineering judgment. Table 2.6.5-1 summarizes the failure rates for major elements of the system.

Table 2.6.5-1. Failure rates (per hour) for major accelerator components.

Component	Failure-to-operate
Ion source rf antenna	2×10^{-2}
Ion source extractor	2.5×10^{-4}
Ion source turbomech vac pump	5×10^{-5}
LEBT focusing magnet	2×10^{-5}
LEBT steering magnet	2×10^{-5}
DTL quadrupole magnet	2×10^{-5}
DTL support structure	3×10^{-7}
DTL drive loop	5×10^{-5}
DTL cavity structure	1×10^{-6}
High power rf tetrode	1×10^{-4}
Circulator	2×10^{-5}
RF transport	1×10^{-6}
Directional coupler	1×10^{-6}
Reflectometer	1×10^{-6}
Resonance control	1×10^{-5}
Solid-state driver amp	2×10^{-5}

The expected number of failures over the 40-year life of the facility can be estimated by multiplying the above failure rates by 350,000, the number of hours in 40 years. The result shows that a significant number of repairs is expected to be necessary over the facility lifetime. Therefore, maintenance capability shall be provided to deal with such repairs as is being discussed below.

2.6.5.2 Availability

The accelerator system availability shall exceed 88% during the lifetime of the plant.

Using information from Table 2.6.5-1 an availability model for the proposed Accelerator Facility was assembled. The MTBF and MTTR data employed in the analyses are summarized in Table 2.6.5-2. The MTBF values correspond to the failure rates in Table 2.6.5-1. The MTTR values are based on engineering judgment.

Table 2.6.5-2. Availability data for accelerator system components.

Component	MTBF (h)	MTTR (h)
Ion source rf antenna	48	0.75
Ion source extractor	4000	12
Ion source turbomech vac pump	20,000	4
LEBT focusing magnet	50,000	3
LEBT steering magnet	50,000	3
DTL quadrupole magnet	50,000	72
DTL support structure	3,000,000	10
DTL drive loop	20,000	24
DTL cavity structure	1,000,000	24
High power rf tetrode	10,000	14
Circulator	1,000,000	1
RF transport	1,000,000	10
Directional coupler	1,000,000	10
Reflectometer	1,000,000	10
Resonance control	100,000	10
Solid-state driver amp	50,000	2

The RAM model of the IFMIF accelerator system, including the injector, beamline, rf system, and the HEBT, is shown in Fig. 2.6.5-1 below. The AND gates indicate serial availability dependence and the "OR" gates indicate redundancy. The reliability parameters (MTBF, MTTR, reliability, R, and the availability, A) are calculated for each one of the subsystems using similar RAM models. The modeling is carried five levels down to components of the system (the most important systems are presented in the following sections). The availability analysis predicts 90.7 % availability for the IFMIF Accelerator Facility, above the required goal of 88%.

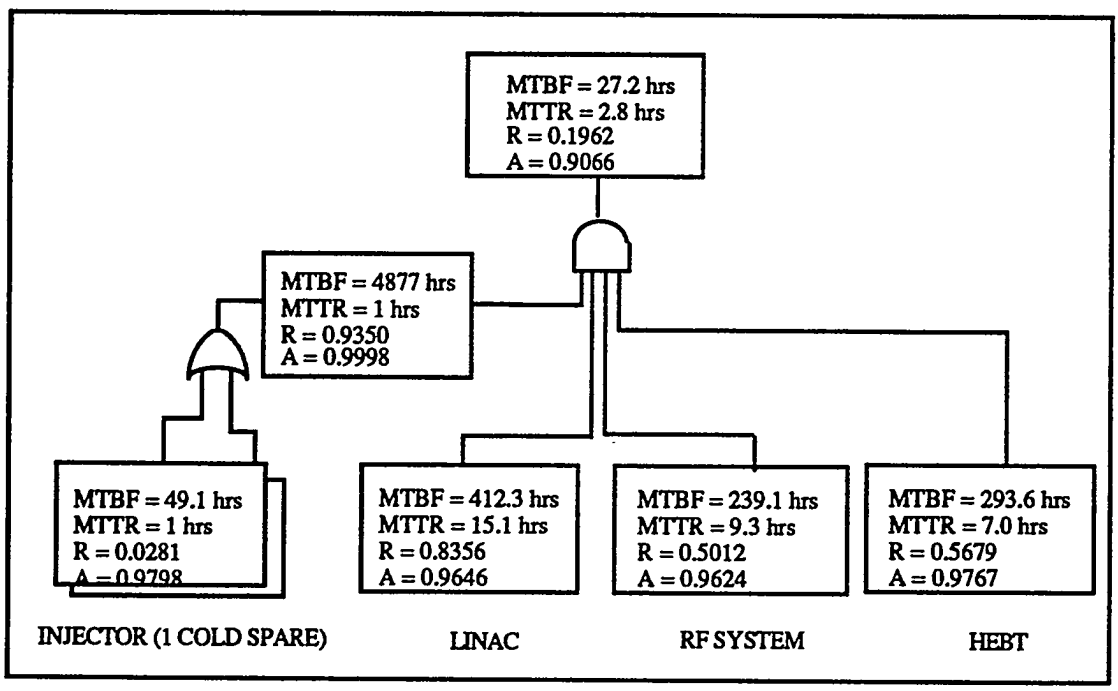

Fig. 2.6.5-1. RAM model of the IFMIF accelerator system.

One of the concerns of the experimenters is that high-voltage sparking could be a significant contributor to the number of short (0-3 min) beam outage events as indicated by operating data gathered at existing facilities. At Fermilab[17] it is reported that over a period of almost 10 years of the systems operation, such arcing events constituted more than 50% off all the beam-outage events. Their contribution to the total downtime, however, was only 7.5%, and, as such, it did not significantly affect the system availability, producing only a sort of

"availability flicker." On the other hand, if such short outages are significant to the experiment being run, then the reliability of the system is considerably reduced. One of the authors of the above reference reported in a private communication that during the most recent run, from November 1993 to July 1995, the total number of outage events with 0-5 min duration was 1837, which means that one occurred, on the average, every 8.2 hours. Thus, a highly reliable continuous operation of the machine could be guaranteed only for a very short period of time, on the order of hours. This issue could be addressed by a more conservative system design approach with an explicit requirement to minimize the frequency of high-voltage sparking events if such short duration beam outages turned out to be damaging to the experiments.

The following sections discuss the availability considerations for the most important subsystems in more detail.

2.6.5.2.1 Injector

One of the ion source candidates, the rf-antenna-driven type, shows promise of lifetimes up to ~200 hours based on extrapolation of experimental data available to date. The other source candidate, the ECR source, promises even better lifetimes of 300-1000 hours. In the RAM *budget* analysis presented here, more conservative MTBF of 48 h and MTTR of 0.75 hours are *allowed* for the rf antenna and the overall system level availability target is met. Both numbers are consistent with engineering evaluation of technology currently available or achievable with minimum development. The analysis thus demonstrates that the system availability requirements can be met with the existing state of the art in the ion source technology, albeit for the price of a redundant injector. Any improvement achieved by either lengthening the MTBF or shortening the MTTR will also satisfy the overall system requirement. A full curve of availability effects vs source lifetime is available from the ASM model.

In the proposed design, the parallel sources can be switched in milliseconds (requires data on effects of polarity reversal on field distribution in the switching magnet), provided that the source being put into the beamline has been previously brought-up and stabilized. This, of course, implies that the switching is not a result of an unscheduled failure of the operating source, but a preplanned procedure scheduled either according to a pre-defined number of resource hours or based on an observed degradation of the units performance. If the operating source fails unexpectedly, the outage can be kept below 1 min with an automated control system. This time is required to stabilize the sources output from either a cold state or a low-power permanent readiness and assumes that the source has been previously conditioned. Otherwise, conditioning the source will require a day. At the present time, no particular advantage is seen in maintaining the source at the low-power permanent readiness state even though it purportedly does not degrade its MTBF or reduce its life, because the unavailability in either case is because of the need to stabilize the beam and does not become shorter.

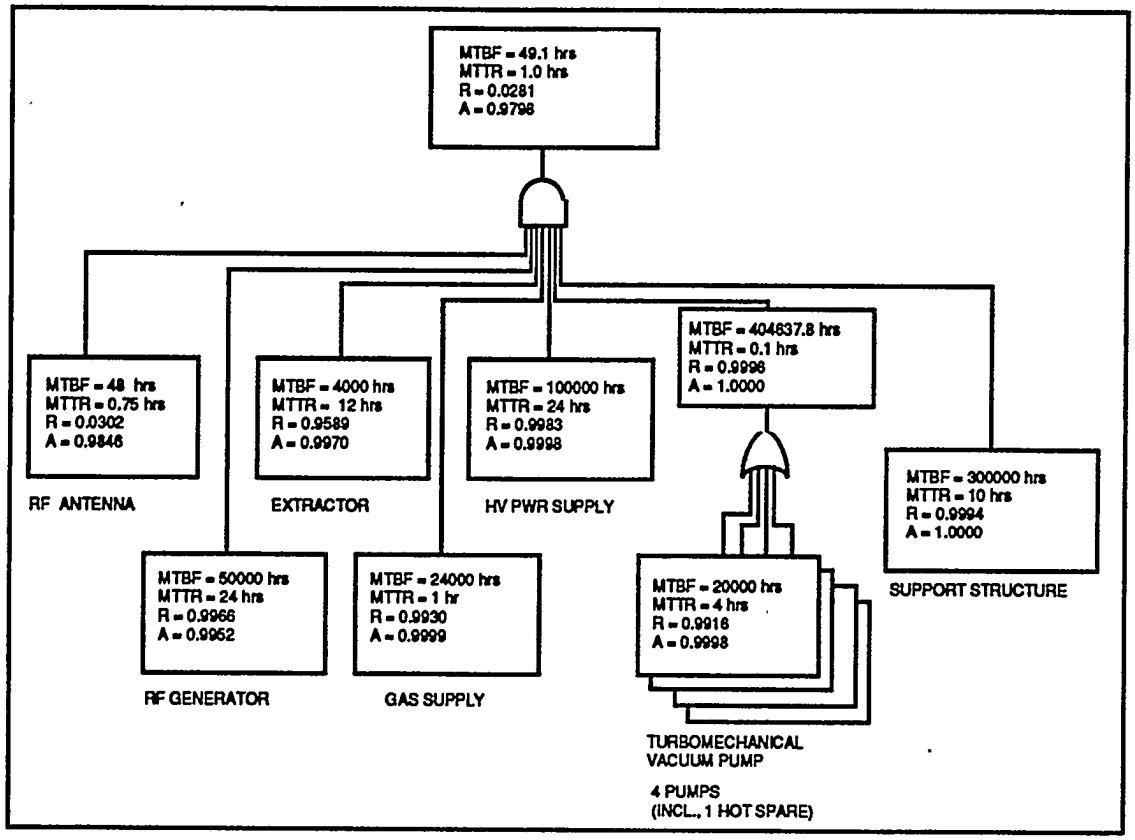

Fig. 2.6.5-2. The RAM model of the ion source.

Fig. 2.6.5-2 shows the RAM model of the ion source with the MTBF and the MTTR times indicated. The corresponding availability and reliability estimates are indicated as well. The ion source rf antenna with an MTBF of 48 h and MTTR of 45 min is the most significant contributor to the ion sources, and as a consequence, the injectors availability. With these MTBF and MTTR values, the expected number of replacements required on the average over a years period is 183 and the total time spent in repairing the source is 137 h. Since the rf antenna dominates the injector, the overall numbers for the injector are not that much larger, with 190 repairs taking 192 h over a years period.

Table 2.6.5-3 below summarizes the availability and reliability results for the injector system. The individual MTBF and MTTR values (in hours) used for every component are shown. (Round-off errors appear in the sums.) Also indicated are the number of components, number of spares (if any), type of redundancy (number 1 indicates a hot, or operational redundancy, while number 2, indicates a cold, or standby redundancy), annual number of replacements, average amount of time spent annually for repairs, availability, and reliability over a period of one week (168 h).

Table 2.6.5-3. Summary of availability and reliability calculations for injector system.

System / Subsystem / Assembly / Equipment	MTBF (h)	MTTR (h)	No. of Asy / Leg	No. of Spares Included	Redundancy Type	Annual Replacements	Annual Repair Time (h)	Steady State Availability	Mission Reliablty
INJECTOR:									
Ion Source:									
RF Antenna	48	1	1	0	0	183	137	0.9846	0.0302
Ion Source rf Gen.	50,000	24	1	0	0	0	4	0.9995	0.9966
Extractor	4,000	12	1	0	0	2	26	0.9970	0.9589
Gas Supply	24,000	1	1	0	0	0	0	1.0000	0.9930
HV Power Supply	100,000	24	1	0	0	0	2	0.9998	0.9983
Turbomolec. Vac Pumps	20,000	4	4	1	1	2	7	1.0000	0.9996
Support Structure	3,000,000	10	1	0	0	0	0	1.0000	0.9999
Total Ion Source	49	1				187	177	0.9809	0.0286
LEBT:									
Focusing Solenoid#1	500,000	3	1	0	0	0	0	1.0000	0.9997
Steering Magnet#1	500,000	3	1	0	0	0	0	1.0000	0.9997
Kicker Magnet	500,000	3	1	0	0	0	0	1.0000	0.9997
Steering Magnet#2	500,000	3	1	0	0	0	0	1.0000	0.9997
Focusing Solenoid#2	500,000	3	1	0	0	0	0	1.0000	0.9997
Gas Neutralization	24,000	1	1	0	0	0	0	1.0000	0.9930
Power Supply	500,000	10	1	0	0	0	0	1.0000	0.9997
Cooling	20,000	2	2	1	1	1	2	1.0000	0.9999
Turbomolec. Vac Pumps	20,000	4	2	1	1	1	4	1.0000	0.9999
Diagnostics	24,000	24	1	0	0	0	9	0.9990	0.9930
Support Structure	3,000,000	10	1	0	0	0	0	1.0000	0.9999
Total LEBT	5,235	6				3	15	0.9989	0.9839
Total One Injector	49	1	1	0	0	190	192	0.9798	0.0281
Injector With 1 Cold Spare & On-Line Repair	4,877	1	2	1	2	379	383	0.9998	0.9350
Total Injector System W/Spares:	4,877	1				379	383	0.9998	0.9350

2.6.5.2.2 Linac

The RAM model of the IFMIF Linac consists of three major components: the RFQ, the DTL, and the DTL quadrupole focusing channel. As an example, the RAM model of the DTL is shown in Fig. 2.6.5-3 below. The model includes six tanks, each of which consists of a cavity, drive loop, cooling system, vacuum system, diagnostics, and support structure. The rf power supply to each tank is handled separately, as discussed in the next section. The RAM model of the RFQ is similar, with three segments instead of six. The MTBF estimated for the DTL beamline alone is 895.9 h, MTTR is estimated at 12.05 hours, availability is 98.7%, and reliability over a week is 91.0%.

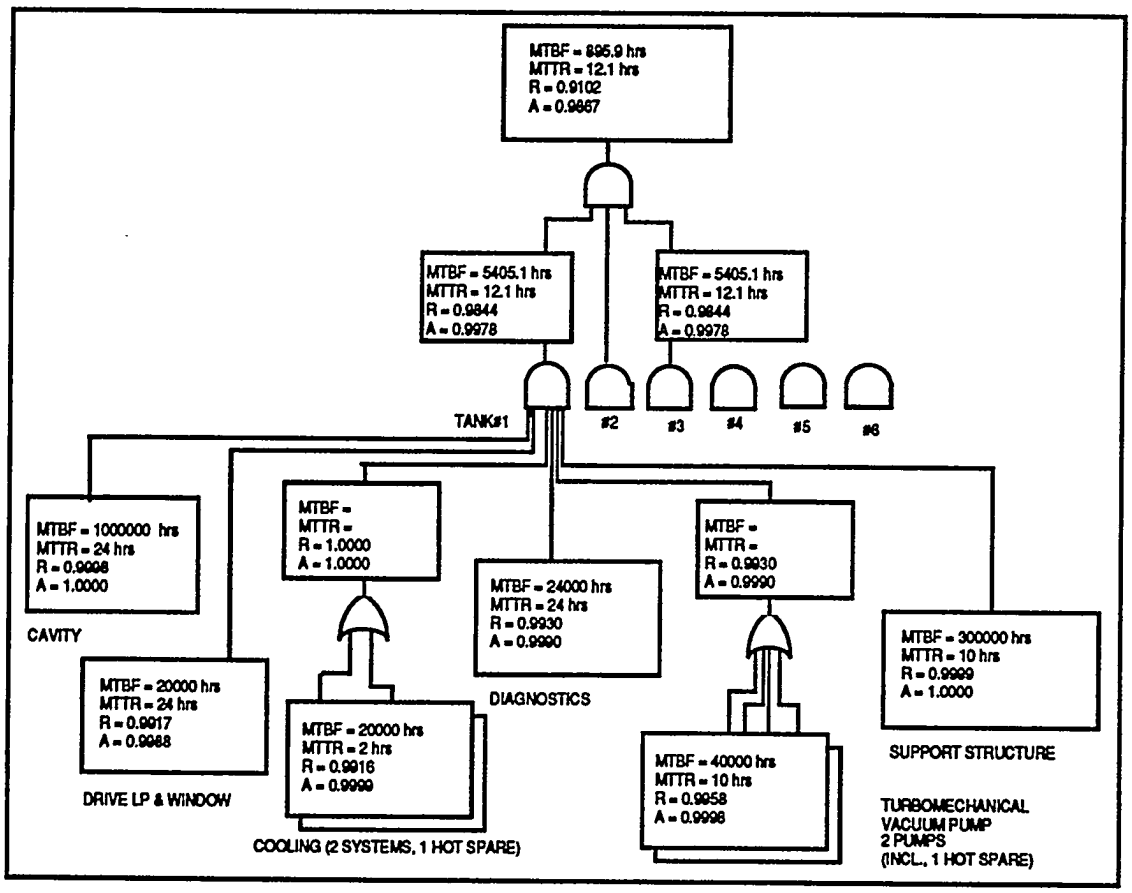

Fig. 2.6.5-3. RAM model of the DTL.

Table 2.6.5-4 below summarizes the availability and reliability results for the linac system. The individual MTBF and MTTR values (in hours) used for every component are shown. Also indicated is the number of components, number of spares (if any), type of redundancy (number 1 indicates a hot, or operational redundancy, while number 2, indicates a cold, or standby redundancy), annual number of replacements, average amount of time spent annually for repairs, availability, and reliability over a period of one week (168 h).

Table 2.6.5-4. Summary of availability and reliability calculations for the linac system.

System / Subsystem / Assembly / Equipment	MTBF (h)	MTTR (h)	No. of Eq. / Leg	No. of Spares Included	Redundancy Type	Annual Replacements	Annual Repair Time (h)	Steady State Availability	Mission Reliablty
LINAC									
RFQ:									
Cavity	1,000,000	24	1	0	0	0	0	1.0000	0.9998
Drive Loops	20,000	24	1	0	0	0	11	0.9988	0.9916
Cooling	20,000	2	2	1	2	1	2	1.0000	1.0000
Turbomolec. Vac Pumps	20,000	4	4	1	1	2	7	1.0000	0.9996
Diagnostics	24,000	24	1	0	0	0	9	0.9990	0.9930
Support Structure	3,000,000	10	1	0	0	0	0	1.0000	0.9999
Total one tank	3,684	8	1	0	0	3	28	0.9978	0.9841
Total RFQ (all tanks)	1,225	8	3	0	0	10	85	0.9933	0.9529
All RFQ Legs	1,225	8				10	85	0.9933	0.9529
DTL:									
Cavity	1,000,000	24	1	0	0	0	0	1.0000	0.9998
Drive Loops	20,000	24	1	0	0	0	11	0.9988	0.9916
Cooling	20,000	2	2	1	2	1	2	1.0000	1.0000
Vacuum	40,000	10	2	1	1	0	4	1.0000	1.0000
Diagnostics	24,000	24	1	0	0	0	9	0.9990	0.9930
Support Structure	3,000,000	10	1	0	0	0	0	1.0000	0.9999
Total one tank	5,405	12	1	0	0	2	26	0.9978	0.9844
Total DTL (all tanks)	896	12	6	0	0	13	154	0.9867	0.9102
All DTL Legs	896	12				13	154	0.9867	0.9102
Quadrupole Focusing Channel									
quadrupole magnet	500,000	72	1	0	0	0	1	0.9999	0.9997
First 30 quads w/ 0 failures tolerable	16,632	72	30	0	0	1	38	0.9957	0.9900
quadrupole magnet	500,000	72	1	0	0	0	1	0.9999	0.9997
Group of 9 quads w/ 1 failure tolerable	55,524	72	9	1	1	0	11	0.9987	0.9970
9 groups of 9 quads	6,137	72	9	0	0	1	102	0.9884	0.9732
Total Quadrupole Focusing Channel	4,469	72				2	140	0.9841	0.9634
All DTL Legs	4,469	72				2	140	0.9841	0.9634
TOTAL LINAC	412	15				25	379	0.9646	0.8356

2.6.5.2.3 RF System

The RAM model of the rf system is shown in Fig. 2.6.5-4. It consists of the RFQ rf system, DTL rf system, and global rf controls (which include the master oscillator and the phase reference distribution system). The estimated MTBF for the rf system is 239.1 h, MTTR, 9.3 h, availability, 96.2%; and reliability over one week (168 h) is estimated at 50.1%.

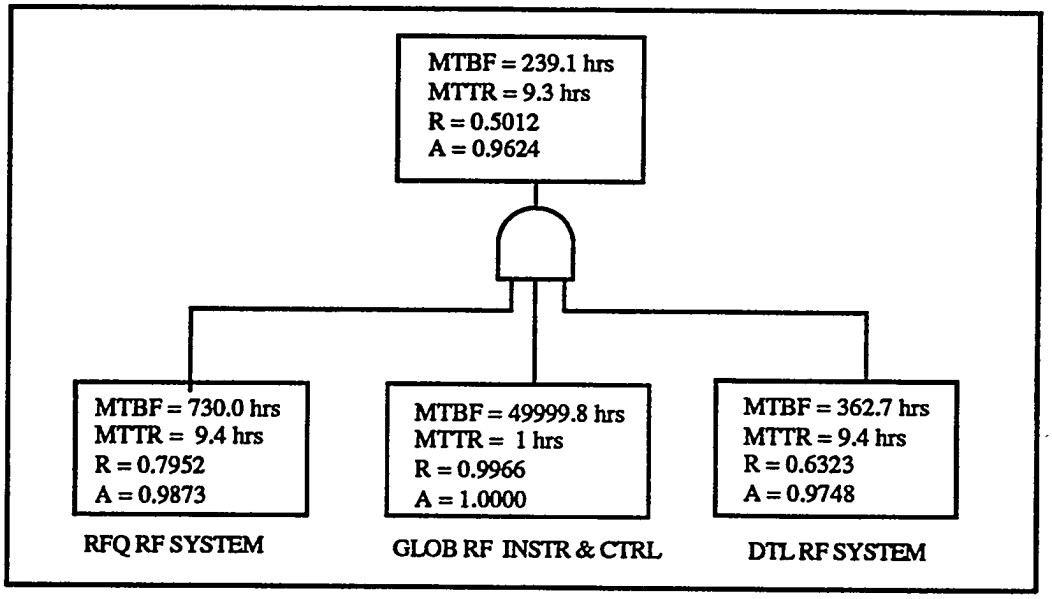

Fig. 2.6.5-4. RAM model of the rf system.

As an example, the RAM model of the DTL rf system is shown in Fig. 2.6.5-5 below. Again, the RAM model of the RFQ rf system is similar. There are six rf stations in the DTL rf system, one per each DTL tank. The estimated MTBF of the DTL rf System is 362.7 h. MTTR is 9.4 h, and the corresponding availability is 97.5%. The RFQ rf model is similar.

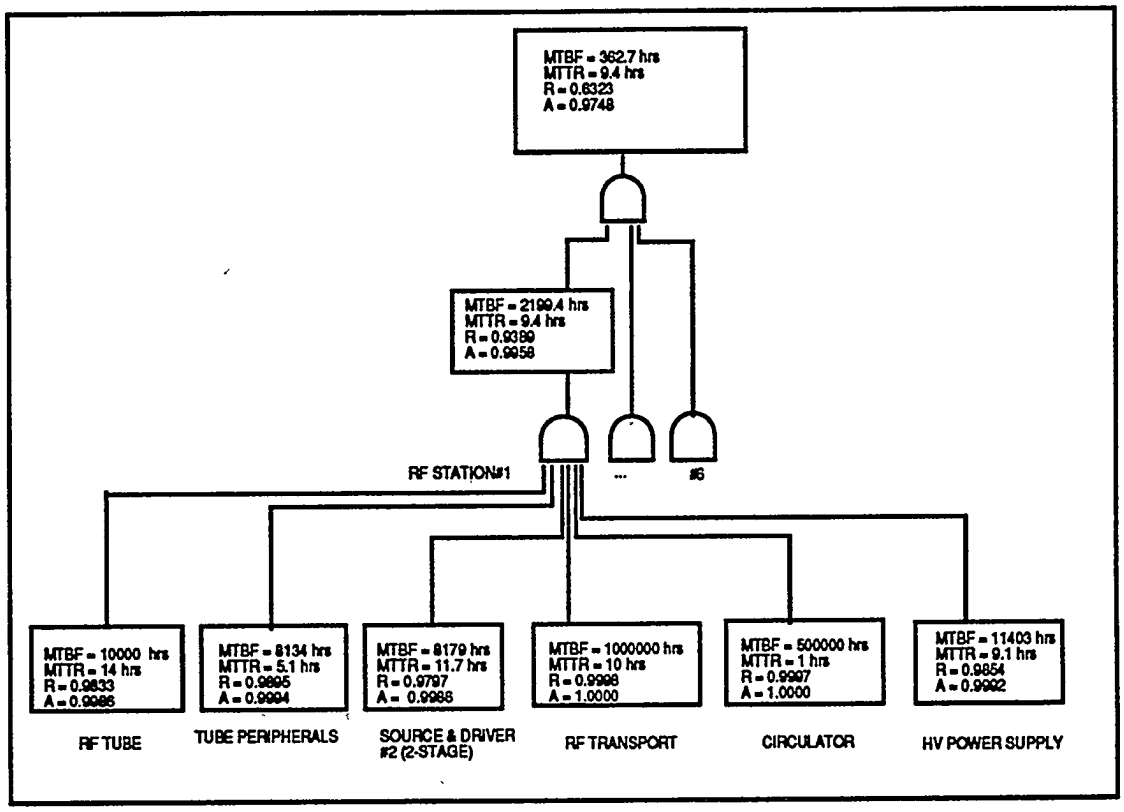

Fig. 2.6.5-5. RAM model of the DTL rf system.

Each rf station includes the high-power tetrode, high-power tube peripherals, rf transport, source and driver, circulator, and the high-voltage power supply. Each one of these subsystems was, in turn, represented with its own corresponding RAM model. As an example, the RAM model of the HV power supply is shown in Fig. 2.6.5-6.

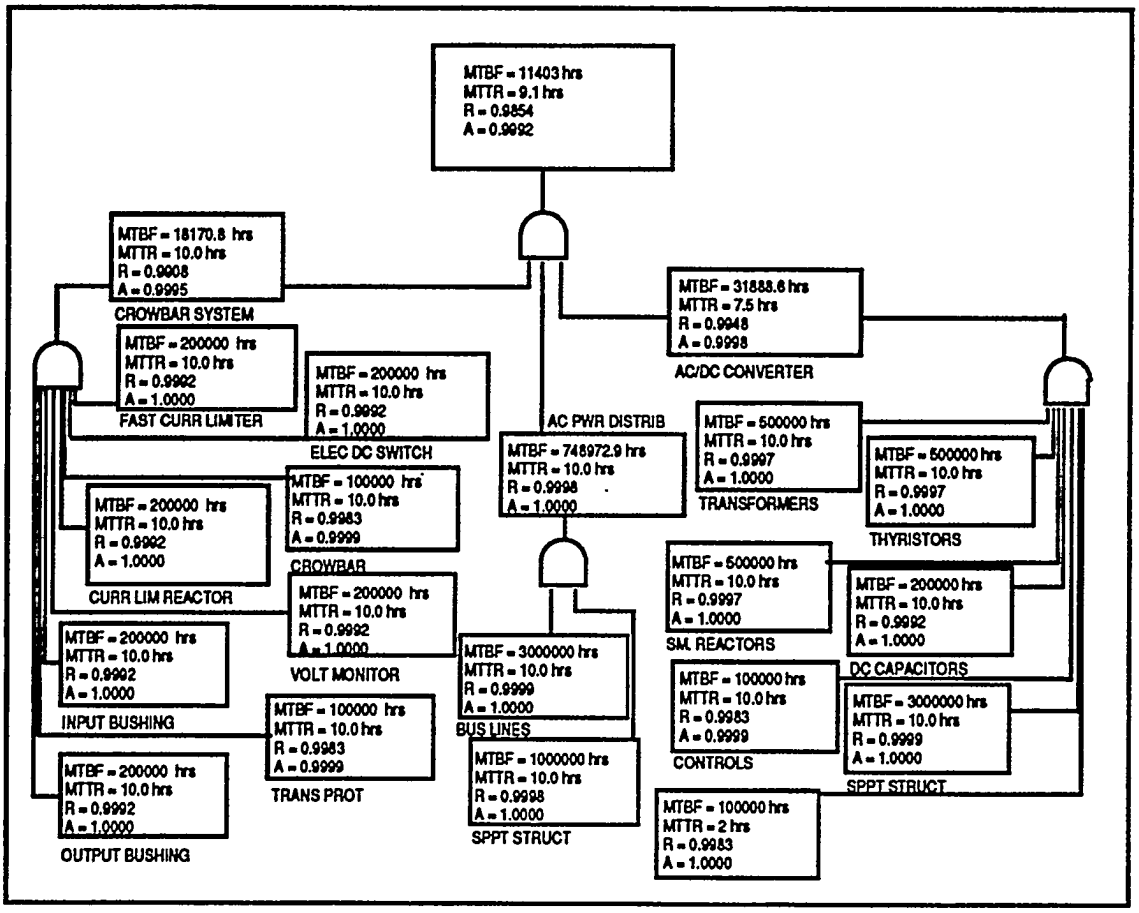

Fig. 2.6.5-6. RAM model of the high-voltage power supply system.

Table 2.6.5-5 below summarizes the availability and reliability results for the rf system. The individual MTBF and MTTR values (in hours) used for every component are shown. Also indicated is the number of components, number of spares (if any), type of redundancy (number 1 indicates a hot, or operational redundancy, while number 2, indicates a cold, or standby redundancy), annual number of replacements, average amount of time spent annually for repairs, availability, and reliability over a period of one week (168 h).

Table 2.6.5-5. Summary of the availability and reliability calculations for the rf system.

System / Subsystem / Assembly / Equipment	MTBF (h)	MTTR (h)	No. of Eq. / Leg	No. of Spares Included	Redundancy Type	Annual Replacements	Annual Repair Time (h)	Steady State Availability	Mission Reliablty
RF System									
High Power Tube Peripherals:									
HP rf Tube									
Unchilled Cooling	20,000	2	2	1	2	1	2	1.0000	1.0000
Total HP rf Tube	400×10^6	2				1	2	1.0000	1.0000
Local Controls & Monitoring									
Directional Couplers	1,000,000	10	1	0	0	0	0	1.0000	0.9998
Reflectometer	1,000,000	10	1	0	0	0	0	1.0000	0.9998
System Controls	100,000	10	1	0	0	0	1	0.9999	0.9983
System diagnostics	100,000	10	1	0	0	0	1	0.9999	0.9983
Resonance Control	100,000	10	1	0	0	0	1	0.9999	0.9983
Cavity Tun'g Cntls	100,000	10	1	0	0	0	1	0.9999	0.9983
Total Local Controls & Monitoring	23,806	10				0	4	0.9996	0.9930
Local Ph & Amp Cntrls	100,000	10	1	0	0	0	1	0.9999	0.9983
LV Power Supply	100,000	10	1	0	0	0	1	0.9999	0.9983
Structure and Cabling	3,000,000	10	1	0	0	0	0	1.0000	0.9999
Total HPTP:	8,134	5				1	7	0.9994	0.9895
Source & Driver - Option #2									
2nd Stage Tube	11000	14	1	0	0	1	11	0.9987	0.9848
2nd Stage tube cavity	1000000	10	1	0	0	0	0	1.0000	0.9998
Solid-state Pre-Amp	50000	2	1	0	0	0	0	1.0000	0.9966
Source	100000	10	1	0	0	0	1	0.9999	0.9983
Other Support Subsystem	3000000	2	1	0	0	0	0	1.0000	0.9999
Total Source & Driver	8279	12				1	12	0.9986	0.9797
Rf Transport:	1000000	10	1	0	0	0	0	1.0000	0.9998
Circulator System:									
Circulator	1000000	1	1	0	0	0	0	1.0000	0.9998
Circltr Ld	1000000	1	1	0	0	0	0	1.0000	0.9998
Total Circultr System:	500000	1				0	0	1.0000	0.9997

System / Subsystem / Assembly	Equipment	MTBF (h)	MTTR (h)	No. of Eq. / Leg	No. of Spares Included	Redundancy Type	Annual Replacements	Annual Repair Time (h)	Steady State Availability	Mission Reliablty
High-voltage Power Supply:										
AC Power Distribution										
	Bus Lines	1,000,000	10	1	0	0	0	0	1.0000	0.9998
	Supp Struct	3,000,000	10	1	0	0	0	0	1.0000	0.9999
Total ac Power Dist'n		749,998	10				0	0	1.0000	0.9998
AC/DC Converter										
	Transfrmrs	500,000	10	1	0	0	0	0	1.0000	0.9997
	Thyristor Valves	500,000	10	1	0	0	0	0	1.0000	0.9997
	Smoothing Reactor	500,000	10	1	0	0	0	0	1.0000	0.9997
	DC capactr	200,000	10	1	0	0	0	0	1.0000	0.9992
	Controls	100,000	10	1	0	0	0	1	0.9999	0.9983
	Cooling	100,000	2	1	0	0	0	0	1.0000	0.9983
	Supp Struct	3,000,000	10	1	0	0	0	0	1.0000	0.9999
Tot ac/dc Converter		31,912	7				0	2	0.9998	0.9947
Crowbar Systems										
	Fast-currnt Limit Fuse	200,000	10	1	0	0	0	0	1.0000	0.9992
	Electronic dc Switch	200,000	10	1	0	0	0	0	1.0000	0.9992
	Crowbar	100,000	10	1	0	0	0	1	0.9999	0.9983
	Curr Limit Reactors	200,000	10	1	0	0	0	0	1.0000	0.9992
	Volt Monitr	200,000	10	1	0	0	0	0	1.0000	0.9992
	Curr Monitr	200,000	10	1	0	0	0	0	1.0000	0.9992
	Inpt bush'g	200,000	10	1	0	0	0	0	1.0000	0.9992
	Otpt bush'g	200,000	10	1	0	0	0	0	1.0000	0.9992
	Transient Protec Circs	100,000	10	1	0	0	0	1	0.9999	0.9983
Tot Crowbar Systems		18,177	10				0	5	0.9995	0.9908
Total High-voltage Power Supply:		11,403	9				1	7	0.9992	0.9854

System / Subsystem / Assembly	Equipment	MTBF (h)	MTTR (h)	No. of Eq. / Leg	No. of Spares Included	Redundancy Type	Annual Replacements	Annual Repair Time (h)	Steady State Availability	Mission Reliablty
Rfq Rf Station:										
	High Power Tube	10,000	14	1	0	0	1	12	0.9986	0.9833
	High Power Tube Periph	8,134	5	1	0	0	1	7	0.9994	0.9895
	RF Transprt	1,000,000	10	1	0	0	0	0	1.0000	0.9998
	Source &Driver	8,179	12	1	0	0	1	12	0.9986	0.9797
	Circulator	500,000	1	1	0	0	0	0	1.0000	0.9997
	HV Pwr Sup	11,403	9	1	0	0	1	7	0.9992	0.9854
Rf Station Total:		2,199	9				4	39	0.9958	0.9389
All rf Stations		730	9	3	0	0	12	117	0.9873	0.7952
Total Rfq Rf Stations:							12	117	0.9873	0.7952
DTL Rf Station:										
	High Power Tube	10,000	14	1	0	0	1	12	0.9986	0.9833
	High Power Tube Periph	8,134	5	1	0	0	1	7	0.9994	0.9895
	RF Transprt	1,000,000	10	1	0	0	0	0	1.0000	0.9998
	Source & Driver	8,179	12	1	0	0	1	12	0.9986	0.9797
	Circulator	500,000	1	1	0	0	0	0	1.0000	0.9997
	HV Power Supply	11,403	9	1	0	0	1	7	0.9992	0.9854
Rf Station Total:		2,199	9				4	39	0.9958	0.9389
All rf Stations		363	9	6	0	0	25	234	0.9748	0.6323
Total DTL Rf Stations:		363	9				25	234	0.9748	0.6323
All Rf Stations:		240	9				37	351	0.9624	0.5028
Global Rf Controls										
Master Oscillator		100,000	1	1	0	0	0	0	1.0000	0.9983
Phase Reference Dist'n		100,000	1	1	0	0	0	0	1.0000	0.9983
Total Global Rf Controls		50,000	1				0	0	1.0000	0.9966
TOTAL rf SYSTEM		239	9				38	351	0.9624	0.5012

2.6.5.2.4 HEBT System

The RAM model of the HEBT system is shown in Fig. 2.6.5-7. It consists of the quadrupole assembly, dipole assembly (partially in the hot room), octupole assembly, buncher cavity assembly, buncher cavities rf power supply, beam tube vacuum system (partially in the hot room), dispersion cavity assembly (in the hot room), and dispersion cavity rf power supply (outside the hot room). The estimated MTBF for the HEBT system is 293.6 h, MTTR, 7.0 h; availability, 97.7%; and reliability over one week (168 h) is estimated at 56.8%.

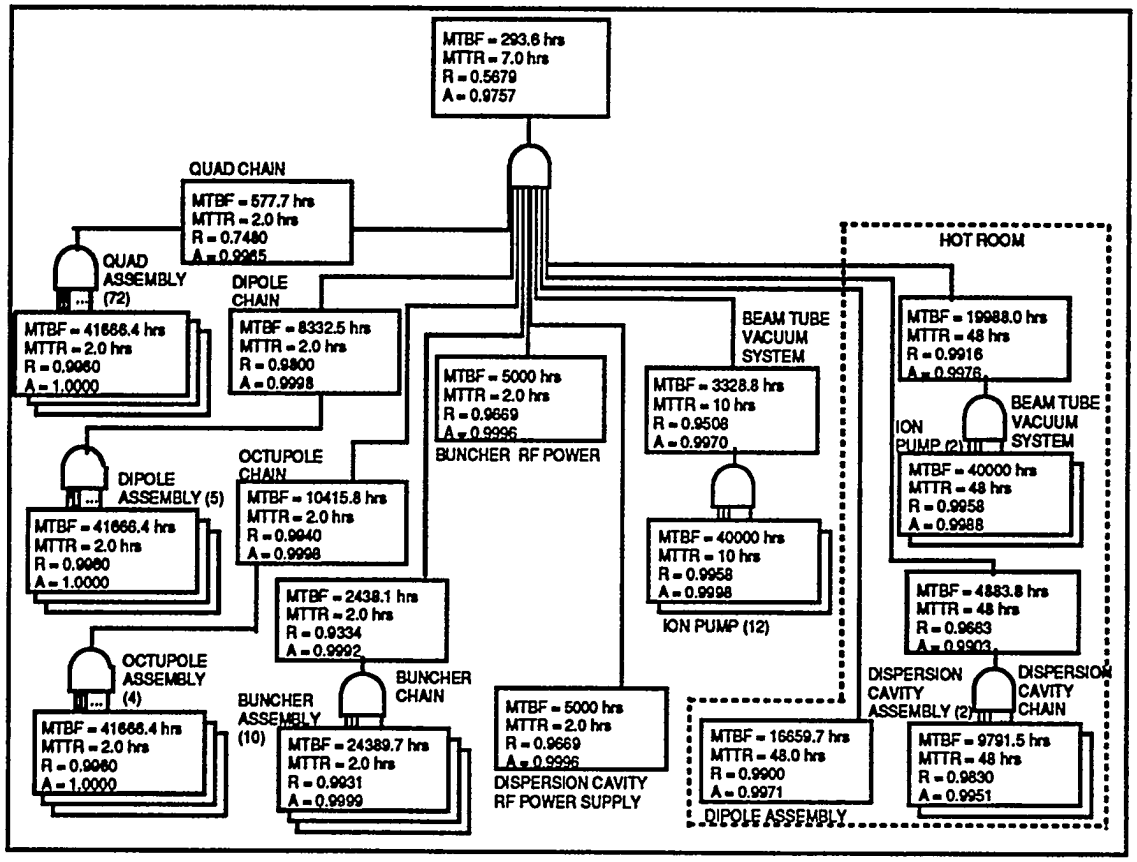

Fig. 2.6.5-7. RAM model of the HEBT system.

Table 2.6.5-6 below summarizes the availability and reliability results for the HEBT System. The individual MTBF and MTTR values (in hours) used for every component are shown. Also indicated is the number of components, number of spares (if any), type of redundancy (number 1 indicates a hot, or operational redundancy, while number 2, indicates a cold, or standby redundancy), annual number of replacements, average amount of time spent annually for repairs, availability, and reliability over a period of one week (168 h).

Table 2.6.5-6. Summary of availability and reliability calculations for the HEBT system.

System	Subsystem	Assembly	Equipment	MTBF (h)	MTTR (h)	No. of Eq. / Leg	No. of Spares Included	Redundancy Type	Annual Replacements	Annual Repair Time (h)	Steady State Availability	Mission Reliablty
HEBT												
	Quadrupole Assembly											
			Electromag	500,000	2	1	0	0	0	0	1.0000	0.9997
			Electrical Power Supl	500,000	2	1	0	0	0	0	1.0000	0.9997
			Electromag Cooling	50,000	2	1	0	0	0	0	1.0000	0.9966
	Total Quadrupole Assy			41,666	2				0	0	1.0000	0.9960
	Quadrupole Chain			578	2	72	0	0	15	30	0.9966	0.7480
	Dipole Assembly:											
			Electromag	500,000	2	1	0	0	0	0	1.0000	0.9997
			Electrical Power Supl	500,000	2	1	0	0	0	0	1.0000	0.9997
			Electromag Cooling	50,000	2	1	0	0	0	0	1.0000	0.9966
	Total Dipole Assembly			41,666	2				0	0	1.0000	0.9960
	Dipole Chain			8,332	2	5	0	0	1	2	0.9998	0.9800
	Octupole Assembly:											
			Electromag	500,000	2	1	0	0	0	0	1.0000	0.9997
			Electrical Power Supl	500,000	2	1	0	0	0	0	1.0000	0.9997
			Electromag Cooling	50,000	2	1	0	0	0	0	1.0000	0.9966
	Total Octupole Assy			41,666	2				0	0	1.0000	0.9960
	Octupole Chain			10,416	2	4	0	0	1	2	0.9998	0.9840

System / Subsystem / Assembly / Equipment	MTBF (h)	MTTR (h)	No. of Eq. / Leg	No. of Spares Included	Redundancy Type	Annual Replacements	Annual Repair Time (h)	Steady State Availability	Mission Reliablty
Buncher Cavity Assy:									
Cavity	1000,000	2	1	0	0	0	0	1.0000	0.9998
Vacuum	50,000	2	1	0	0	0	0	1.0000	0.9966
Cooling	50,000	2	1	0	0	0	0	1.0000	0.9966
Buncher Cavity Assy	24,390	2				0	1	0.9999	0.9931
Buncher Cavity Chain	2,438	2	10	0	0	4	7	0.9992	0.9334
Buncher Cavs rf P S	5,000	2	1	0	0	2	4	0.9996	0.9670
Beam Tube Vacuum Sys									
Ion pump	40,000	10	1	0	0	0	2	0.9998	0.9958
Ion pump chain	3,329	10	12	0	0	3	26	0.9970	0.9508
Dispersion Cav rf P S	5,000	2	1	0	0	2	4	0.9996	0.9670
High Activity Room									
Dipole Assembly:									
Electromag	200,000	48	1	0	0	0	2	0.9998	0.9992
Electrical Power Supl	200,000	48	1	0	0	0	2	0.9998	0.9992
Electromag Cooling	20,000	48	1	0	0	0	21	0.9976	0.9916
Total Dipole Assembly	16,660	48				1	25	0.9971	0.9900
Dipole Chain	16,660	48	1	0	0	1	25	0.9971	0.9900
Dispersion Cavity Assembly:									
Cavity	500,000	48	1	0	0	0	1	0.9999	0.9997
Vacuum	20,000	48	1	0	0	0	21	0.9976	0.9916
Cooling	20,000	48	1	0	0	0	21	0.9976	0.9916
Dispersion Cav Assy	9,791	48				1	43	0.9951	0.9830
Dispersion Cav Chain	4,884	48	2	0	0	2	86	0.9903	0.9663
Beam Tube Vacuum Sys									
Ion pump	40,000	48	1	0	0	0	11	0.9988	0.9958
Ion pump chain	19,988	48	2	0	0	0	21	0.9976	0.9916
TOTAL HEBT	294	7				30	207	0.9767	0.5679

2.6.5.3 Maintainability

Normal maintenance shall be performed on the accelerator system and in the surrounding support areas during scheduled outages as part of the periodic maintenance program. Repairs of noncritical elements such as lighting shall also be performed during scheduled outages. Repair time as short as practicable shall be the design objective for system elements that have a reasonable expectation of becoming dysfunctional several times within the lifetime of the plant. Fig. 2.6.5-8 below illustrates the predicted average annual number of replacements and the estimated average annual repair time (for one accelerator).

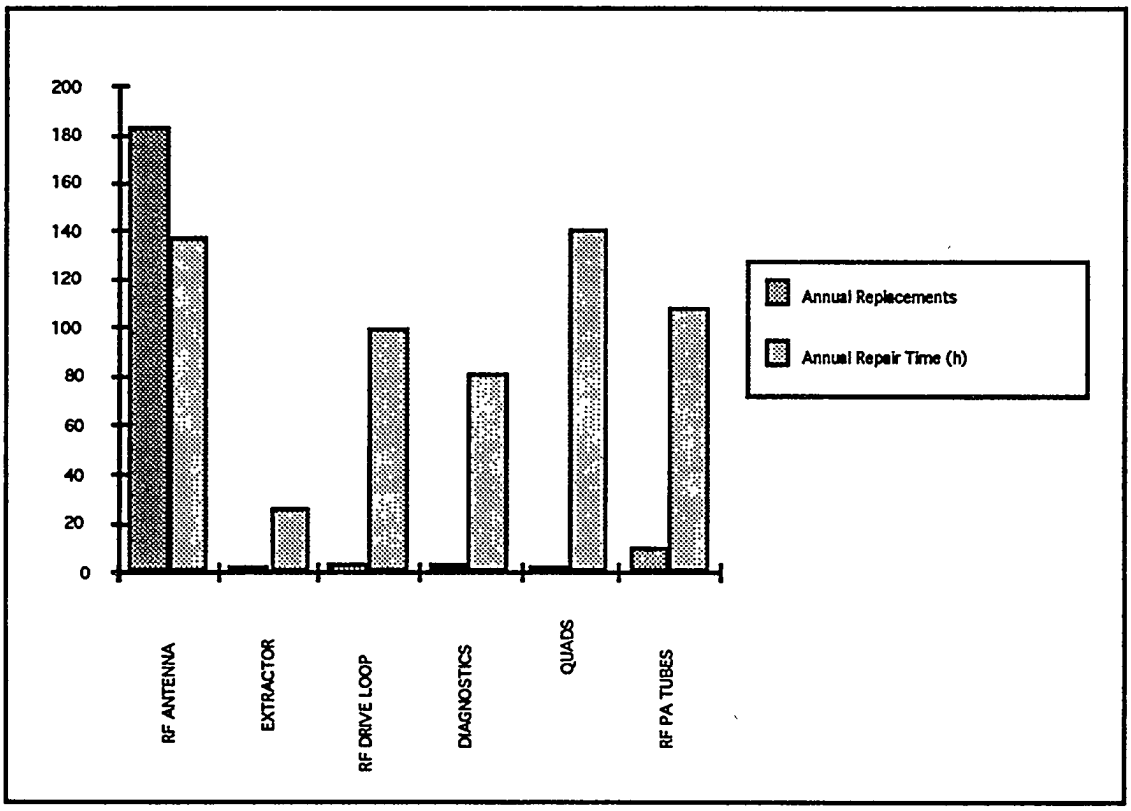

Fig. 2.6.5-8. Predicted repair frequencies.

The maintenance and repair activities require access. Zoning and shielding design shall allow access to the rf system with the beam on. The requirements for access to other accelerator support areas that will require waiting for an appropriate period after beam shutdown to permit radioactive decay processes to reduce the radiation sources shall be minimized. Remote access shall be provided where necessary.

The normal maintenance tasks to be performed in the Accelerator System Support areas include:

- periodic maintenance of filters in various air and water cooling systems in the rf and accelerator cavities;
- periodic maintenance of quality of the insulating oil in the high-voltage equipment tanks;
- periodic inspection of wear and tear in the rotating machinery: electric generators and motors, water pumps, air fans, and turbomechanical vacuum pumps;
- periodic inspection of solid-state electronic devices, including the determination of degree of degradation (e.g. number transistors lost in solid-state rf amplifiers, or number of rectifiers lost in the high-voltage power supplies);

- periodic recalibration of sensor instruments;
- periodic testing of the interlock system (primarily to verify that the users have not circumvented them);
- periodic inspection of the vacuum and positive pressure systems to verify that proper pressure levels are being maintained;
- periodic replacement of desiccant cartridges in various humidity controlled enclosures;
- inspection and periodic maintenance of fire protection equipment;
- replacement of lighting; and
- repair of public address system and public access system telephone.

There are four craft/skill groups that shall require access to the Accelerator System support areas. These are control operators, vacuum technicians, electricians, plumbers, and rf power technicians. Operators will operate the system from the control room. Vacuum technicians will be responsible for maintaining the vacuum system; electricians will provide any needed check-out or maintenance on electrical components. Plumbers will maintain the accelerator cooling system, and rf power technicians will maintain the rf power stations.

2.6.6 Fabrication and Assembly[18]

Components and subsystems will be selected via competitive bid based on experience with similar projects.

Every effort will be made to use commercial components and subsystems rather than creating one-of-a-kind solutions. A prime example is the facility control system, which shall be based on commercial hardware, data transmission network, and commercial facility control software such as EPICS. The facility control system shall provide toolkits and a high-level language protocol and interface for specific control of the system, such as the accelerator rf system, overall accelerator system, operational mode sequencing, target operations, etc.

Costing for the CDA will be performed as follows:

- The accelerator systems will be costed to completion (ready for beam test) using the costing methodology of the United States.
- Costs beyond completion ready for beam tests will be estimated (personnel, spare parts, electricity, utilities, capital).
- Final cost estimate will be in the form of total life-cycle cost (e.g., NGC cost studies done for the Santa Fe accelerator meeting).

2.6.6.1 Maintainability and Operability

The fabrication and assembly shall be performed to accepted mechanical, electrical, vacuum practice. Maintenance accessibility and support shall be a primary consideration for design and planning:

- The accelerator shall be designed to permit maintenance or removal of its component parts. The design goal is hands-on maintenance where practicable with necessary remote maintenance as simple as practicable.
- The accelerator design shall incorporate features to expedite maintenance procedures. Some of these features are modularization, standardization of utility connections, quick disconnect flanges (may need metal seals in high radiation areas), special HEBT quadrupole magnets, and a rapid and reproducible alignment system.
- The design shall be compatible with remote control and monitoring of the accelerator by the facility control system. Manual controls shall be used only for infrequent operations.

2.6.6.2 Grounding Requirements [TBD]

2.6.6.3 Seismic Requirements [TBD]

2.6.6.4 Environmental Design Criteria [TBD]

2.6.7. Development Requirements

2.6.7.1 Outline of work for the 2nd year of the CDA

2.6.7.1.1 System Issues and Analysis:

1. Resolve outstanding interface issues as noted in 2.6.3.

2. Refine cost assessment, using project costing guidelines.

3. RAM is to be a top priority for the accelerator design. The allowable operational maintenance schedule must be rigorously defined. Present guidelines (e.g., 3 months or 1160 h, without further time breakdown) must be made more specific by the integration team. The development of an integrated operations plan for IFMIF is also a high priority issue that affects both the RAM requirements and the scientific objectives of the program. For example, a resolution of the beam flicker requirements (i.e., the accelerator goes down momentarily, but not long enough to affect overall availability) appears to be very significant for development of acceptable accelerator/user interface requirements. The users must provide a set of realistic requirements. The accelerator design must provide a more quantitative definition of limitations (e.g., startup of redundant ion injector, restart after tube arc, etc.). Therefore, an improved/detailed accelerator operations plan, including consideration of scheduled maintenance, predictive failures/maintenance, RAM budget, flicker and system startup/shutdown sequence, etc. should be developed.

4. Beam loss specification and the study of beam loss mechanisms and control should receive significant and sustained attention. Experimental verification of some aspects may be attained by the fortunate circumstance of a separately funded experiment at Saclay.

5. A frequency of 175 MHz was decided as the baseline choice. Additional conservatism could be considered by further assessment of a somewhat lower frequency; the minimum is probably 150 MHz. The Kilpatrick factor could be somewhat reduced from 1.8, and rf power sources would have somewhat more operating margin.

6. Preparations are being made for Russian contributions on a possible 87.5 MHz RFQ design alternative for the entire linac to 40-MeV. Work would include calculations of the 87.5 MHz RFQ geometry, beam dynamics simulations for this accelerator, design and manufacturing of the structure, and low-power rf investigations of performance.

7. The approximately equivalent costs of RT and S/C 8-40-MeV linacs appears to require multiple SC cavities be driven from a large rf amplifier. This requires additional technical evaluation to determine feasibility and an assessment of operational flexibility losses from this approach. Also, further refinement of the alternative superconducting linac design and assessment of development options is indicated to improve considerations of RT versus S/C configurations.

8. The EC team may give consideration to alternative RFQ and DTL options.

2.6.7.1.2 Design Issues:

1. Although 8-MeV RFQ designs with compact output beam distributions and no high-energy losses (10,000 particle simulations) have been developed at IAP, Frankfurt and at LANL, the RFQ transverse aperture factor is small. Detailed investigation is needed of the RFQ particle loss energies and trajectories. If RFQ activation becomes a concern, the design or engineering/operational solutions shall be modified to minimize impact with a goal of 'hands-on' maintenance.

2. The baseline accelerator design shall be refined. The RFQ/DTL match will be studied in detail. End-to-end simulation should be performed for normal and off-normal operations. The HEBT design should be updated to accommodate the new requirements for target spot characteristics.

3. RF system design, the major cost center for the accelerator, requires systematic definition of requirements, tolerances, and a detailed control system concept. This work will be accomplished utilizing a sophisticated rf and control system modeling code.

4. The instrumentation and central computer control system concept must be developed in detail for the accelerator, target and test cells, and for their central integration. The hardware and software approach can be based without much effort on available control technology and software such as EPICS; significant effort is required to outline high-level strategies for the various operational and maintenance modes.

2.6.7.1.3 Experimental tasks:

1. Ion source and LEBT experimental work must continue within the funding available to the partners. The adoption of the dual injector approach (for RAM advantage) requires additional consideration of bending and space-charge compensation issues in the LEBT.

2. An rf test module should be built at the earliest opportunity, for design guidance on many critical issues, e.g., multiple drives, windows, drive loops and control systems. A plan for such a test module should be developed in the second year of the CDA.

3. Verification prototyping should be addressed, for either RT or S/C approaches. No operational facility at this power level has been built and operated. RAM characteristics are an especially important consideration in prototyping. Inclusion of successful prototype equipment in the final facility is a feasible option.

2.6.7.1.4 Documentation Issues:

Documentation of the project is to be stored in the data base currently implemented at Frascati, Italy.

2.6.7.2 Subsystem Development Requirements

The IFMIF accelerator design is based on current technology, but integrated systems operating at the required beam intensity and power levels have not been built and operated. The purpose of the development program is to provide engineering confirmation; operations, maintenance, and safety procedure design; and preliminary RAM and final design and cost information.

2.6.7.2.1 RF power system development model

A full-power rf power system development model using the Eimac 4CM2500KG 1.3 MW tetrode or equivalent shall be built. RF power delivery tests to the accelerator load are to be included. Full-power tests will be possible into a resistive dummy load and to a dummy load with tuning provisions to allow measurement of the Rieke diagram. Full power tests into a representative resonant load [perhaps the RFQ or DTL development model(s)] will also be possible.

The rf power system development model enables tests of the power delivery capability, rf field phase and amplitude control, logic control for normal and off-normal conditions, development of operations, maintenance, and fault-recovery procedures, and acquisition of RAM information.

The equipment in the rf power system development model will be transferred to the final facility as operational equipment as appropriate.

2.6.7.2.2 RFQ development model

A full-power RFQ development model shall be built and tested. Cold-model tests will be conducted to verify the construction and field tuning techniques prior to construction of the full-power model. Full-power tests will be accomplished using the rf power system development module.

The RFQ development module enables tests of power handling and cooling capability, rf field tuning in the RFQ, rf field phase and amplitude control, logic control for normal and off-normal conditions, development of operations, maintenance, and fault-recovery procedures, and acquisition of RAM information.

The equipment in the RFQ development module will be transferred to the final facility as appropriate.

2.6.7.2.3 Beam instrumentation development

The beam centroid will be monitored by conventional centroid position and phase monitors adapted to the rf frequency and beampipe dimensions of IFMIF. If the beam is debunched in the HEBT to essentially dc, development of special monitors may be required.

Beam profile monitoring is a difficult development task. Nonintercepting methods are needed for intense CW beams. Candidates for profile monitors in the linac or HEBT include monitoring light from background gas scattering and flying-wire monitors at selected locations, with minimum-projection tomographic reconstruction. Beam-on-target profile monitoring should be accomplished by several different physical methods for redundant safety system concerns[19].

Beam-loss radiation monitors required along the accelerator and HEBT shall be prototyped.

2.6.7.2.4 Injector development model

Generation of deuteron beams in the dual ion-source and LEBT with the required availability and operational characteristics requires an engineering development model. Development issues include: achieving the required beam current and quality; thorough characterization of the beam emittance for matching design; beam characterization methods that can be used during extended maintenance periods but are not present in the LEBT in normal operation; switching to the standby source and beam restoration; robotic replacement of source antennas under vacuum; procedures for varying the beam current and duty-factor from tune-up conditions to full CW operation; ion-source parameter control system development; LEBT neutralization; and matching.

Operation of the injector development model would be with H_2^+ rather than deuterium.

The equipment in the injector development module will be transferred to the final facility as appropriate.

2.6.7.2.5 DTL development model

A full-power DTL development model shall be built and tested. Cold-model tests will be conducted to verify the construction and field tuning techniques prior to construction of the full-power model. Full-power tests will be accomplished using the rf power system development module.

The DTL development module enables tests of the power handling and cooling capability, rf field-tuning in the DTL, rf field phase and amplitude control, logic control for normal and off-normal conditions, development of operations, maintenance, and fault-recovery procedures, and acquisition of RAM information.

The equipment in the DTL development module will be transferred to the final facility as appropriate.

2.6.7.2.6 Integrated beam development model

With one rf power system development module, some integrated testing of the injector and RFQ with H_2^+ beam will be possible. The development models should be installed such that integrated tests with beam are possible.

2.6.8 Summary of Alternatives

2.6.8.1 Superconducting (SC) 8-40 MeV Accelerator.

Baseline designs for a 175 MHz superconducting 8-40 MeV accelerator have been presented by Japan and the United States Superconducting accelerator technology is of strong interest to this project and to other high-intensity particle beam applications of current interest because its technical and operational advantages have already made it the technology of choice for many electron beam applications, and it may be the preferred technology for ion beam applications in the near future, once a prototype test with full beam can be made.

Preliminary trade-off studies on the superconducting design, and between the superconducting and room-temperature designs, have been completed using the ASM code. This is the first time that such comparisons have been made quantitatively at this level of detail. The cost estimates showed the two approaches to have essentially equal life-cycle cost.

Additional shielding calculations are needed for the superconducting components because additional materials, such as niobium, are involved.

The interest among the partners in the potential of this approach, and reassurance that costs are similar, result in the inclusion of this alternative as a primary option. It is important that an investment be made in demonstrating this technology for IFMIF and other intense ion-beam applications.

Some indicative design parameters of the alternative configuration:

- Dual ECR/rf ion injectors (as in baseline),
- 175 MHz RFQ, 100 keV, 8 MeV (as in baseline),
- 175 MHz SCL, 8-40 MeV, 48 quarter wave coaxial cavities,
- Peak fields = 6.24 MV/m,
- Bore = 8 cm,
- System length = 44.7 m,
- System rf power = 6.81 MW,
- Total accelerator ac power = 12.6 MW (less refrigeration), and
- Operating temperature = 4.5 K.

2.6.8.2. 525 MHz 8-40-MeV Coupled-Cavity Drift Tube Linac (CCDTL)

A frequency transition to a higher harmonic is often made in linacs - when the beam energy has increased to a point where the space-charge forces allow the transition - in order to reduce the cost of the rest of the machine. A new structure developed at LANL for protons has a number of additional technical advantages, particularly a no-joint brazed construction that is desirable for long life, factory-type operation. This structure, the coupled-cavity DTL, has been evaluated for the IFMIF deuteron application. Besides evaluation of the structure, the study was valuable in developing better matching techniques that will be applied to the DTL and S/C designs. Careful beam handling required after the 8 MeV transition requires the length of the 8-40-MeV 525 MHz CCDTL to equal that of the 8-40-MeV DTL, so the present ASM cost estimates are essentially equal. This option will be carried as a secondary option, in order to take advantage of proton machine development work, and in case future development of beam funneling on other projects reopens consideration of this approach for cost reduction.

Some indicative design parameters of the alternative configuration:

- Dual ECR/rf ion injectors,
- 175 MHz RFQ, 100 keV, 8-MeV,
- Beam aperture = 2.5 cm,
- Frequency-tripled 525 MHz CCDTL, 8-40-MeV, 146 cavities, 2 drift tube type,
- Ramped gradient from 0.27 MV/m to 2.8 MV/m,
- System length = 58.8 m,
- System rf power = 9.68 MW, and
- Total accelerator ac power = 20.5 MW.

2.6.9 References

1. L.M. Young, "An 8-Meter Long Coupled Cavity RFQ LINAC," Proc. 1994 International Linac Conference, Tsukuba, Japan, August, 1994. p. 178.

2. D. Schrage, et al., "A New RFQ LINAC Fabrication Technique," Proc. 1994 International Linac Conference, Tsukuba, Japan, August, 1994. p. 152.

3. J.W. Rathke & L.M. Young, "Engineering Design and Fabrication of a CW Deuterium RFQ," Proc. 1994 International Linac Conference, Tsukuba, Japan, August, 1994. p. 272.

4. D. Rusthoi, et al., "Non-Linear Beam Expander For ESNIT," Proc. 1994 International Linac Conference, Tsukuba, Japan, August, 1994. p. 579.

5. Lloyd Young, personnel communication, 10/11/95

6. CEBAF arcing experience, 9/95

7. 10698 FMIT Test-End Instrumentation Requirements, 2/28/83, 15661 FMIT Test-End Instrumentation Conceptual Design Summary, 3/84, FMIT files, Box 80254.

8. "Fusion Materials Irradiation Test Facility Draft Safety Analysis", HEDL-TC-2154, March 1982.

9. FMIT Basis of Design Documents, April 1981, FMIT files, Box 86712.

10. TC-2061 Nuclear Data Support of FMIT Design, FMIT files, Box 86712.

11. Beam Spill Model Meeting, LASL, 1/24/79, and subsequent Accelerator Basis of Design Documents.

12. "FMIT Spectral Dependent Neutron Yield Due to Beam Loss", HP 78-088, 12/27/78.

13. Accelerator Shielding & Source Terms, FMIT files, Box 86717, and FMIT Shielding Design Calcs - Vol I-VI, FMIT files, Box 86576

14. 10696 Prelim Failure Modes & Effects Analysis (2/82), FMIT files, Box 80254.

15. TC-2226 FMIT Availability Report, 9/83, FMIT files, Box 86712

16. Q100-5 Availability, Maintainability & Reliability (Availability), FMIT files, Boxes 86549, 86550.

17. "Operational Experience with the Fermilab LINAC", 1992 Linac Conference

18. Accelerator Installation docs, incl. Level III Schedule, FMIT files, Box 80246.

19. SK-3-22939 "FMIT Beam Viewing Assy Concept #2, Test-End Instrumentation Requirements Summary", FMIT Test-End Instrumentation Requirements & Methods Summary - FMIT files, Box 86579.

2.7 CONVENTIONAL FACILITIES

The conventional facilities will house and support the four process facilities in a single building centered around the Test Cells. Smaller structures will be used to house some utility and support operations. Generally, the conventional facilities reflect the independence of the process facilities by grouping them in separate areas. This approach fits with the philosophy of giving the responsibility for facilities to designated groups and also allows IFMIF to be constructed in stages to optimize installation and testing.

2.7.1 Facility Requirements

The requirements for each of the facility complexes of the main building are different; thus, each is discussed separately.

2.7.1.1 Accelerator Complex

The accelerator complex will house the two parallel linear accelerators with adjoining rf power supply rooms and a shared service and maintenance room. The two accelerators and rf systems will be isolated from each other to permit personnel to maintain a down system while the other remains in operation. The accelerators will direct the beams into a single beam transport room that will house all the HEBT turning and focusing elements to steer the beams from the accelerators to the Li-target.

The structures of the accelerator halls and beam transport room must provide shielding to protect external personnel during operation. The buildings must also provide a controlled atmosphere to prevent release of contaminated air. Wall penetrations in the accelerator and beam transport buildings will be minimized. Special provisions are required to isolate the radiation hazards. Shielding is required for the rf power feeds through the accelerator hall. The beam transport room must be protected from backscattered target neutrons and potential lithium vapor. The beam transport room walls must be designed to withstand potential beam-loss accidents.

Maintenance requirements stipulate the accelerator and beam transport halls will be sized to allow replacement of components (i.e., accelerator sections, turning and focusing elements). In addition, special access provisions will be made to allow rapid replacement of ion source filaments during accelerator operation. Components to be repaired will be moved to the accelerator service and maintenance room, with controlled access to the accelerator halls or beam transport room. This is a normal industrial area with provisions to handle packaged activated components.

The rf power supply rooms must be located adjacent to the accelerator halls to minimize the length of the rf feeds. The power supply room arrangement will allow space for repair and replacement of equipment by personnel and for locally controlled maintenance equipment.

The accelerator buildings must be conformed to normal industrial practice for construction, ventilation, and other services.

2.7.1.2 Target Complex

The target complex will house the lithium processing systems (requirements for the Li-target area are described in Sect. 2.7.1.3). The complex will be located under the Test Cells as required by the process flow requirements.

Its structures must provide containment in case of Li leak, as well as shielding to protect personnel external to the buildings, from gamma sources because of activated Li, highly activated impurities, and corrosion products in the loop.

Maintenance requires that personnel have access to limited areas of the complex. In addition, hatches and hoists will be provided for the installation and removal of all equipment.

An area for the process cooling tower will be provided close to the complex. A fire protection system and an inert gas supply for use in chemical reaction accidents will also be provided. The ventilation system will be coupled with the overall plant effluent system.

The complex must conform to normal industrial practice for construction, ventilation, and other services.

2.7.1.3 Test and Examination Complex

The test and examination complex will house the series of cells and glove boxes required to place test assemblies in the Test Cells, prepare test modules, and examine material specimens. The cells will provide shielding to protect personnel in the accessible areas close to the cells from neutrons generated by the Li-target, from gamma radiation produced by activated material, as well as containment in case of Li leak. The shielding will progress from a few centimeters of lead on the glove boxes to several meters of concrete around the Test Cells.

The cells will contain and support the equipment described in Sect. 2.5; Test Facilities. Conventional facilities will provide suitable remote handling equipment (crane, telescopic arms, manipulators), viewing systems [windows, television (TV) cameras] and a module/component transfer system. For the high-activity cells, telerobotic manipulator systems and closed circuit TV cameras will be required. A fire protection system and an inert gas supply must also be provided to detect and contain chemical reaction accidents because of Li leak as well as for general building services.

All the cells must conform to normal industrial practice for construction, ventilation, and other services.

2.7.1.4 General Plant Functions

The main IFMIF building includes several functional areas on the periphery of the three primary facilities. These areas include administration, maintenance shops, shipping, and auxiliary plant structures. The administration complex is required to provide standard personnel support; as follows:

- plant reception area and visitor control,
- offices,
- meeting rooms,
- central control room,
- controlled access to the main building, and
- health physics laboratory.

The maintenance shops will be located above the HEBT. Both "hot" and standard maintenance shop facilities will be provided. A manipulator repair facility will also be included. A general purpose service area is required to inspect, process, package, and ship contaminated and activated materials.

Other plant structures are required for the switchyard substation, the diesel generator, the water treatment system, the air compressors, the heat rejection systems, and plant security.

2.7.1.5 Site Improvements

Site requirements will be developed as part of the site selection process to begin after the CDA. At this time, a cursory review of the requirements that must be considered for the IFMIF site are assumed to be characteristic of any accelerator site. The site ground should be of reasonable homogeneous structure and should have hydrology compatible with the safety considerations associated with the plant. Seismic requirements and population safety considerations will be determined by the local regulation. Good transportation links with access to national and international heavy haulage methods are required

2.7.1.6 Heat Rejection Systems

A circulating water system with cooling towers will be required to reject process heat. The circulating water system will serve all of the water-cooled equipment where risk of water activation is absent. The water used for cooling the accelerator components and beam transport elements can be activated. Consequently, a safe system for isolating the activated water will be provided.

Approximately 14000 L/min of deionized water are required for each accelerator and 3000 L/min for the beam transport elements.

The total required heat rejection capacity through water circulation is approximately 20 MW. The major cooling loads are 4 MW for each accelerator/power supply and 10 MW for the target. The beam turning elements reject 0.3 MW; the test module rejects 0.2 MW; the beam calibration dump rejects 0.2 MW; and the rest of the facility rejects approximately 1 MW. Another 20 MW of heat power are rejected through the plant ventilation system.

2.7.1.7 Electrical Power Distribution

An electrical power distribution (EPD) system is needed to supply electric power from the grid to each facility with a high degree of reliability to operate the plant, protect the facility from damage, and ensure the safety of plant, staff, and the public under all conditions.

The following requirements are to be met:

- All electrical distribution equipment should be commercial grade. Sizes and ratings should match existing standards as far as possible. All equipment will be designed within its ratings and maintain an adequate factor of safety against transient conditions.
- All equipment will be enclosed so as to present no external exposure to operating personnel of electrical shock or mechanical hazard.
- The EPD system will limit disturbance to the electrical grid to an acceptable level under any plant conditions.
- Computer control shall be employed to provide fast and accurate control of the EPD system.
- An emergency diesel generator shall distribute a power of TBD in the event of loss-of-site power to systems that can accept an interruption of a few seconds.
- An uninterruptable power supply for a limited amount of energy (TBD), will be also provided.

The total amount of electrical power required for operating all the IFMIF facilities is about 40 MW. The main facility loads are given below:

	Power, kW	Voltage, V
Accelerator #1	16,000	13,800
Accelerator #2	16,000	13,800
Turning (2 beams)	1,300	13,800
Test, Target, Plant	5,000	480
Total	38,500	41,880

2.7.1.8 Plant Ventilation Systems

A plant ventilation system for all the buildings will be provided to control the temperature and humidity and to provide an adequate supply of air.

The release of the radiologically contaminated gas to the environment will be controlled by the central plant process gas-effluent system.

The flow of air, the cooling, and the heat power for all the buildings are (TBD).

2.7.1.9 Other Plant Services

Services provided throughout the plant as required include water, compressed air, natural gas, and vacuum. Water systems include potable water, deionized water, industrial and recuperated water, and water for fire protection and sewers. An inert gas loop (He/Ar) is needed for Test Cells and Li target cells. The amounts of water, compressed air, natural gas, and inert gas have (TBD).

The facility will also provide a central radioactive waste management system. The flow and the quality of radioactive wastes is (TBD).

A common vacuum system backing each of the vacuum pumps that exhaust potentially contaminated gases is also required. This exhausts to the treatment systems of the central process gas-effluent system.

2.7.2 Facility Description

2.7.2.1 Accelerator Buildings

Two accelerator halls are located adjacent to each other on one side of the beam transport room. A second pair of accelerators can be installed subsequently on the opposite side. All accelerator beams are turned 90° and directed to either the target or the beam calibration station at one end of the transport room. The accelerator hall floors are at different levels to minimize the vertical beam turning required. The rf power supply areas, one for each accelerator, are located above the accelerator halls. A service and maintenance room is provided at the end of each accelerator pair.

The accelerator hall is a rectangular, below-grade structure, 12 m wide by 8 m high and 49 m long. Clearance is provided on one side of the accelerator for rf and other service lines and on the other side for maintenance operations. Clearance is provided so that a complete module section can be removed from the accelerator and transported to the service room at the end of the building. This operation will be supported either by a 25-tonne overhead crane or by airpads. Replacement of an accelerator module is an unscheduled event and is performed with personnel in the hall after accelerator shutdown. The ion source in the injector module requires frequent replacement (on the order of 20 h). The injectors are redundant, and special procedures are being developed to replace the source with the accelerator operating.

The hall structure uses 2.5-m-thick reinforced concrete walls and roof to shield personnel external to the building during operations. The foundation is a thick reinforced concrete mat to provide accelerator stability and an accurate reference foundation for aligning beams. A ventilation system provides recirculation cooling/heating with a flow of one air change per hour with exhaust to the stack. The hall is maintained at 8-mm water gauge negative pressure. For personnel access, the ventilation rate is increased to three air changes per hour. Penetrations through the wall are provided with bellows seals to prevent air exchange. Major penetrations include the nine rf coax feeds of 50-cm diameter.

The beam transport room is divided by a shielding wall into a shielded turning area 29 m wide by 56 m long by 8 m high, and a radiation isolation area 29 m wide by 8 m long by 8 m high, which will have some exposure to backscattered neutrons and lithium vapor. Clearance and a 7.5-tonne crane are provided to allow replacement of transport elements. Hatches are provided so that the removed components can be lifted into the hot cell area above. Maintenance is performed by personnel using locally controlled equipment and local shielding as required only when the accelerators are not operating.

The structure of the beam transport room is 2.5-m-thick reinforced concrete walls and roof for shielding and a reinforced concrete mat for stability. The ventilation system provides recirculation cooling/heating with exhaust to the stack, a negative pressure of 8-mm water gauge, and provisions to increase the flow to three air changes per hour for access after shutdown.

The accelerator service and maintenance room is 10 m by 30 m by 5 m high. This area is used to perform maintenance and alignment of accelerator modules and is designed to normal industrial standards.

The accelerator rf power supply areas are 21 m by 43 m by 5 m high and are located at a grade above the accelerator tunnels. These structures are steel-framed with insulated metal siding and roofs. The power supply areas are two-level structures with a 10-tonne crane. The first level contains the nine accelerator power supplies. The second level contains the beam transport rf power supply areas, magnet power supplies, instrumentation and controls, and service coolant manifolds. The areas are ventilated by three air changes per hour with roof exhaust.

The beam calibration vault is 4 m by 3 m by 2.5 m high to contain the calibration dump. Approximately 200 kW of heat must be removed from the vault.

The accelerator complex requires electrical power, cooling water, and general building services. Each accelerator requires 16 MVA at 13.8 kV delivered to the rf power supply transformers located on pads adjacent to the power supply building. An additional 1.3 MVA are required for the rf supplies to the beam transport room with two accelerators operating. The magnet power supplies and vacuum pumps require 480-V power of 210 kVA for each accelerator and 640 kVA for beam transport.

Cooling water is delivered to manifolds in the power supply buildings to serve the magnets and rf cavities. Approximately 14,000 L/min of deionized water are required for each accelerator and 3000 L/min for the beam transport elements.

2.7.2.2 Target Complex

The target complex consists of three separate areas. Two areas, equal and symmetrical with respect to the beam calibration station, are located inside the two Test Cells and house the Li-target system and the related quench tank. The third area is located below the Test Cell area and is composed of several rooms (lithium cells) designed for housing the primary lithium loop and its ancillary systems and the secondary organic fluid loop.

Since the areas housing the two Li-targets belong to the Test Cells, their description will be provided in that framework. However, these areas communicate with the lithium cells through penetrations for inlet and outlet lithium pipes.

Outside the facility buildings and close to the lithium cells, space will be allocated to house the cooling tower system to transfer heat generated in the lithium target to the environment.

The internal size of the lithium cells will be established according to the dimensions and layout of the primary and secondary loops and their ancillary systems. The walls of the lithium cells are (TBD)-m thick concrete for shielding.

The complex will conform to normal industrial practice for construction, ventilation, and other services.

Special attention will be reserved for the choice of appropriate materials for decontamination problems for decommissioning.

The Li containment, in case of a Li-loop failure, is provided by a stainless-steel airtight liner on the inner surfaces. This liner also allows to maintenance of low-pressure air environment. The atmosphere will be controlled to avoid release of contaminated air. The ventilation system provides flow at one air change per hour with exhaust to the stack, a negative pressure of 8-mm water gauge, and provisions to increase the flow to three air changes per hour for access after shutdown.

The lithium cells are unoccupied during operation, but personnel access is allowed after shutdown for in-service inspection and maintenance, allowing time for air exchange and radioactive decay. Clearances towards accessible areas are foreseen to allow removal or introduction of components in the cells. Some limited remote handling equipment can be foreseen for highly activated components (e.g., impurity and corrosion products traps).

The target complex interfaces with the test and examination complex and the beam turning room through the radiation isolation area.

The Li-target complex will be designed to accommodate the potential future expansion of the IFMIF facility to four-beam lines and two continuously-operating Test Cells. This will result in a configuration of the cells to provide for added lithium pumping, monitoring and purification equipment.

2.7.2.3 Test and Examination Complex

The test and examination complex includes two independent Test Cells, with the beam calibration station placed in between, some service cells, and several hot cells, glove boxes, and lead boxes.

The test and examination complex will be designed to accommodate the potential future expansion of the IFMIF facility to four-beam lines and two continuously-operating Test Cells.

2.7.2.3.1 Test Cells

To house a Li-target system (Li-target, quench tank, and related piping), a test module assembly and its related equipment, each of the two Test Cell is 4.5 m long by 3 m wide by 2.5 m high. The lithium-quench tank will be located in a large hole on the floor.

The high-intensity neutron source generated in the Li-target and the induced gamma radiation requires special attention to the protection of personnel working around the Test Cells. Thus, each test chamber is constructed of 3-m-thick reinforced concrete for shielding from neutron and gamma radiation. Adjoining the concrete walls is a 40-cm stainless-steel wall to protect the concrete structure, with respect to the neutron and gamma heating. Thus, a cooling system to remove neutron wall-heating must be provided.

The two Test Cells are never occupied by personnel and are inaccessible during operation and at shutdown.

In order to operate inside each Test Cell with remote handling equipment, an aperture in the Test Cell access room is foreseen in each Test Cell roof. Particularly, this aperture allows placement and removal of the test module assembly inside the Test Cell, and, if necessary, the cover of the Test Cell can be remotely removed to introduce the crane from the service cell for extracting Li-target back-plate (or the whole target) for substitution. However, all the remote handling operation inside the Test Cells is controlled through the Test Cell access room and can be performed only at shutdown.

A low-activation stainless-steel airtight liner on the Test Cell inner surfaces guarantees lithium containment in case of Li leaks. During normal operation, this liner also allows maintenance of a low-pressure atmosphere that will be controlled to avoid release of contaminated gas. Alternately, for removing the accumulated tritium during shutdown and removing lithium in case of a back-plate failure, an inert-gas loop must be foreseen.

A fire protection system will be provided in the event of a lithium or NaK chemical reaction accident.

Special attention will be reserved for the choice of appropriate materials for the decontamination problems for decommissioning.

2.7.2.3.2 Test Cell/Target Access Room

The Test Cell access room is located directly above the Test Cell area and is designed to operate by means of remote handling equipment inside the two Test Cells and the beam calibration station, and to extract and place test modules and Li-target system inside the Test Cells. It is also sized to allow temporary storage of the test modules.

The concrete structures of this room are (TBD)-m thick to protect personnel working in the adjacent accessible areas during operation and at shutdown when a high level radioactivity is present in the cell.

Atmosphere will be controlled and maintained at negative pressure to avoid external airborne contamination.

Personnel access is strictly controlled and permitted only in the absence of high activity in the room.

The Test Cell access room communicates with the VTA and the target service cell through a module and component transfer system to transport VTA and target components during installation and removal operations

2.7.2.3.3 VTA /Target Service Hot Cell

The VTA /target service cell is located between the Test Cell access room and the test module handling cell and can communicate with these cells through a module and component transfer system. It must provide storage space for the VTA and is primarily dedicated to assembling and disassembling the test modules for the VTA. In addition, maintenance work on the VTA and the Li-target will be performed.

The cell will be provided with windows and manipulators and has (TBD) thick concrete shielding walls to protect personnel against radiation from activated components handled inside the cells. Communication with the adjacent cells is guaranteed by mean of a Module and Component Transfer System.

The cell is unoccupied during VTA and target handling, and access through ports is strictly controlled and permitted only in the absence of activated components. Internal shielding walls will be of such dimensions as to protect personnel inside the cell when radioactive sources are present in adjacent cells.

The atmosphere is normally air with a negative pressure with respect to the accessible areas and will be controlled to avoid external airborne contamination. Because of the handling of tritiated components, a stainless-steel airtight liner will be provided.

Direct access to personnel from accessible areas through a shielded door is provided for inspection and for maintenance of remote handling tools only in the absence of activated components in the cell.

2.7.2.3.4 Test Module Handling Hot Cell

The test module handling hot cell is located between the VTA /target service cell and the PIE laboratory and can communicate with these cells through a module and component transfer system. It must provide space for the equipment devoted to the removal of the packets containing the individual specimens from the test modules to retrieve the irradiated specimens.

The cells will be provided with windows and manipulators and have (TBD)-thick concrete shielding walls to protect personnel against radiation from activated components handled inside the cells. Communication with the adjacent cells is guaranteed by means of a module and component transfer system.

The cell is unoccupied during module assembly handling. Access through ports is strictly controlled and permitted only in absence of activated components. Internal shielding walls will be of such dimensions as to protect personnel inside the cell when radioactive sources are present in adjacent cells.

The atmosphere is normally air with a negative pressure with respect to the accessible areas and will be controlled to avoid external airborne contamination. Because of the handling of tritiated components, a stainless-steel airtight liner will be provided.

2.7.2.3.5 PIE Laboratory

This laboratory consists of an array of 10 hot cells for testing conventional high-level radioactive specimens, 10 shielded glove boxes for testing conventional low-level radioactive specimens, 7 hot cells for testing tritium-contaminated high-level radioactive specimens, and 5 glove boxes for testing tritium-contaminated low-level radioactive specimens (GB).

The cells will be grouped in the same area (TBD) m by (TBD) m by (TBD) m high, close to the test module handling cell, according to the activated and contaminated material flow. Hot cells and glove boxes designs are entirely conventional and will be provided by the test facilities.

2.7.2.3.6 General Purpose Systems

A suitable room close to the Test Cell area will be provided to house general purpose systems such as hot cell ventilation utilities, a Test Cell control station, and a data acquisition system.

2.7.2.4 General Plant Buildings

The administration complex provides common areas and offices for a staff of fifty. It is located adjacent to, and provides controlled access to, the main building. It includes the plant reception area, visitor control, meeting rooms, and the central control room. A shop area of the complex provides general work areas for uncontaminated material maintenance, the health physics laboratory, and plant shipping and receiving. The administration area structure and services are designed to normal industrial standards to provide a comfortable interior environment.

The contaminated/activated material service building receives general plant waste and components replaced during maintenance. It is located adjacent to the test and examination area. The material is inspected and categorized to determine the type of processing required. Some items may be decontaminated and returned to service. Others require processing and packaging into a waste form suitable for shipment for disposal. The area structure provides isolation from other plant areas and a controlled atmosphere. Access to the area is controlled through a health physics station, with change areas for special personnel protection, as required.

Other plant structures include the electrical switchyard area, the diesel generator building, the water treatment building, cooling towers, and plant security system. For the plant security system guardhouses, perimeter fencing, sensor systems, and exterior lighting are provided.

2.7.2.5 Site Improvements

Land area of 10 ha, including 2 ha of developed land, must be available to accommodate the main building, the administration complex, the contaminated/activated material service building, and other plant structures. The site selection should take into account the requirements listed in the Sect. 2.7.1.5 for an accelerator plant.

2.7.2.6 Heat Rejection Systems

The plant circulating water system is a closed loop with chemistry control. Intermediate loops are used where required to reduce the potential for contaminated coolant loss to the environment. The target system includes a lithium loop and a secondary organic loop from which the heat is rejected to the water system. The test modules also contain a secondary loop, currently envisioned as air cooling to the service cell. The high-energy accelerator sections may also require secondary loops, and some structures require precise temperature control. The plant circulating water system interfaces with the accelerator system at the accelerator cooling manifolds and rf heat exchangers. It interfaces with the target system at the organic to water heat exchanger. The components of the circulating water system are of standard commercial grade. They include conventional horizontally-mounted centrifugal pumps and shell and tube heat exchangers.

Heat from all sources is combined and transferred to a common cooling tower loop. This includes multiple wet cooling cells with induced draft fans.

2.7.2.7 Electrical Power Distribution

The electrical power distribution system will receive power from the grid, transform it to the required voltages, and distribute it to the facility loads as required. A switchyard substation will be the interface between the grid and the facility receiving power from the grid. Power will be transformed from the grid voltage TBD to the voltage used in the facilities.

The switchyard will also contain the various high-voltage breakers and disconnect switches needed to meet load demands and the instrumentation transfer logic and controls for these operations.

Downstream from the switchyard, the EPS is divided into two main parts—the accelerator rf system and the remaining subsystems and facilities.

2.7.2.8 Plant Ventilation System

A plant ventilation system is provided in each of the plant areas according to the specific requirements in terms of temperature, humidity, and air supply and removal.

Activated atmospheres are generated in the accelerator and turning rooms, in the target rooms, and in the test and examination work areas. These areas use local gas filtration and treatment systems if required. The exhaust from the local treatment systems and from the potentially contaminated rooms is routed to a central plenum and through a stack. Systems to monitor and treat the exhaust as required through the stack are located near the plenum.

2.7.2.9 Other Plant Services

The water treatment system treats the raw water supply for cooling tower makeup and other plant uses. The type and amount of chemical treatment will depend on the water supply. In addition, cooling water in closed loops is treated with corrosion inhibitors and biocides. Other treated water uses include potable hot and cold water, chilled water for heating, ventilation, and air conditioning (HVAC) systems, and fire protection. Additional fire protection agents, such as halogen and carbon dioxide, will be provided as needed.

The IFMIF facility will be equipped with a single vacuum system for backing each vacuum pump. Vacuum manifolds for this house vacuum system will be provided for the subsystems to accept the exhaust gases from beam transport, target assembly, Li-quench tank, etc. The manifold is evacuated with a series of dry vacuum pump trains that discharge exhaust at the atmospheric pressure. The exhaust of the pump is collected in a low pressure reservoir that accepts and processes other primary effluents from any other part of the facility. The pumps should be oil free to prevent contamination with tritiated oils. Organic materials are subject to the permeation of tritium and possible radiation damage that would eventually cause unexpected leaks. The effluent is anticipated to contain Li vapor/aerosol and tritium and thus requires processing before being released to the environment. The target lithium that is exposed to the beam should always be evacuated to maintain the vacuum in the beam line in the range of 10^{-4} Pa. Anticipated species of the gas are hydrogen isotopes, moisture, helium, and other typical residual gases in a vacuum chamber. The beam transport also will be evacuated, and the exhaust will contain tritium as a product of reaction in the beam line. The exhaust of these vacuum pumps will, therefore, require special features for the tritium system.

Particular technical difficulty is anticipated for the pumping of lithium vapor that should be processed as a radioactive contaminant. Currently the only available technique is a foreline trap backed with an oil-free vacuum pump train. The traps will separate the lithium vapor from the exhaust as a deposit. If lithium makes aerosol or particulates, they may not be trapped, and a filter that will considerably reduce the conductance is needed. The trap should be periodically replaced or regenerated. None of the known oil-free vacuum pumps are known to work well with lithium deposits. Especially, turbo molecular pumps are often sensitive for deposits that cause errors on the movement of the rotor. Some concepts to capture and/or prevent the lithium vapor mixed with the vacuum exhaust are suggested and considered as a part of a CDA task.

A processing system for the vacuum exhaust from the target, quench tank, beam line, cover gas for Li pretreatment or maintenance, and any other primary effluents of the IFMIF facility is identified as a major part of the chemical process that needs special attention in the aspect of radiation control. One of the major forms of the airborne contaminant removed from the IFMIF system is as solid particulates. Radioactive beryllium, nitrogen, oxygen, and other impurity elements are trapped/filtered in the form of solid lithium compounds and eventually trapped in the Li chemical loop. The other form of the material from the primary loop to the outside is as a gaseous species, and the performance of the removal efficiency for these two contaminants would be the dominant factor in the estimation of the impact to the environment.

The exhaust should be treated for tritium removal. Catalytic oxidation followed by adsorption on molecular sieves is the primary option. Molecular sieves will be periodically regenerated for continuous operation. Resulting tritiated water will be discarded according to the local regulation of the IFMIF site. Significant amounts of materials will be activated with neutrons, particularly in the Test Cell region, and a HEPA filter is expected to remove the

airborne activity from the vacuum exhaust. Radioactive inert gases cannot be removed by chemical process and, thus, formation of such nuclides should be avoided wherever possible.

Secondary containment of the IFMIF includes Test Cell vacuum, enclosure for the lithium process, local enclosure for the beam transports, and glove boxes for the postirradiation experiments. Inert cover gas for lithium and secondary containment atmosphere may contain small amounts of tritium and other radioactive materials that should be processed before being released to the environment. Some of these containments are closed loop, and tritium removal is designed with either reaction with an active metal such as titanium or uranium or oxidation-adsorption, depending on the oxygen and moisture content of the exhaust.

Gas services include argon for inert atmosphere maintenance, compressed air for equipment and instruments throughout the facility, and cover gases for equipment in the cooling systems.

The radioactive waste system collects, processes, and disposes of all solid, liquid, and gaseous radioactive wastes generated in the plant. The tritium extracted from the lithium loop must be shipped off-site by special procedures. The target and other high-activity waste must be packaged in special containers for shipment. Low-level radioactive waste generated by normal facility operation and maintenance must be characterized and packaged for shipment.

2.7.3 Facility Interfaces

The interfaces between conventional facilities and the other facilities consist essentially of learning the needs of these other facilities in terms of:

- electrical power supply and voltages (normal, emergency)
- heat to be rejected by water cooling,
- quality (temperature, humidity) of the ambient atmosphere in their areas,
- air removal in areas (to be identified) with potential atmospheric contamination,
- air cooling power,
- compressed air,
- inert gases (He/Ar),
- water (quantity and quality)
- contaminated material flow (quantity and specific activity),
- dimensions of the facilities and ancillary equipment,
- shielding (identification of areas to be shielded),
- personnel access to the facilities.

Some of these needs have already been communicated to the conventional facilities and are included in the paragraph concerning the requirements or the descriptions of the various facilities of this Sect. 2.7.0.

As the design of the conventional facilities advances , more and more information on specific needs will be requested of other facilities.

2.7.4 Safety Considerations

2.7.4.1 General

The conventional facility is an infrastructure that provides necessary utility service for the subsystems. Many of the safety functions of the facility depend on the utility supply and, thus, the loss of such a utility results in a significant safety problem. Conventional hazards common to the building are neglected, and only the safety concerns specific for the IFMIF facility is considered here.

2.7.4.2 Tabulation

Table 2.7.4-1 provides the FMEA factor descriptions. No quantitative analysis is made, and only possible causes and effects of off-normal events are identified and evaluated.

Table 2.7.4-1 FMEA factors

Ease of Detection		
A	Easy	Immediately detected and alarmed
B	Limited	Detected with delay or needs observation
#C	Difficult	No detection available
Frequency of Occurrence		
A	Operational events	More than once per year
B	Likely events	$1/y \sim 10^{-2}$/year
C	Unlikely Events	$10^{-2} \sim 10^{-4}$/year
#D	Extremely Unlikely Events	Less than $10^{-4}/y$
Risk Potential		
I		Operational caution required
II	Danger	Limited function
III	Minor hazard	Immediate halt and repair
IV	Major hazard	Accident, damage of facility
V	Extreme	Possible environmental effect

2.7.4.3 Failure Modes And Effects Analysis For IFMIF Conventional Facility

Utility Component	Purpose	Failure Mode	Effect	Detection	Mitigation or Prevention	Freq.	Risk
Electricity	Provide power	Loss of site power (EPD)	Immediate stop of major function	A.	Interlock emergency generator	C	III
		Loss of UPS	Loss of control	A.	Fail safe design	D	IV
Cooling water	Dis-charge facility heat	Stop	Loss of cooling	A	Interlock	D	III
		Major loss	Heated components	A. Pressure flow	Interlock	D	III
		Minor leak	Possible contamina-tion	B. Monitor B. Monitor	Leak check	B	II
Compressed air	Actuate valves	Lost pressure	Loss of control of components	A. Pressure	Interlock fail-safe position	C	III
Inert gas supply	Chemical process, 2nd contain-ment	Lost pressure	Insufficient inert gas	A. Flow, pressure	Isolating process	C	II
		Contami-nation	Improper atmosphere	B. Monitors	Alarm, purging, cleaning	B	II
Building ventilation	Atmos-phere control	Loss of negative pressure	Possible contami-nation	A. Pressure	Isolating rooms	C	III
		Contami-nation	Personnel exposure	B. Monitors	Alarm, purging, cleaning	B	III, V
House vacuum	Provide rough vacuum	Poor vacuum	Insufficient pumping	A. Pressure	Isolating process	A	II
		Lost vacuum	Pump failure	A. Pressure	Interlock	B	III
		Contami-nation	Active gas pumping	B. Monitors	Alarm, purging, cleaning	A	II
Effluent processing	Exhaust detritia-tion	Loss of cleaning	Tritium in exhaust	A. Monitor	Isolating process	C	V
		Poor decontam-ination	Tritium in exhaust	A. Monitors	Recycling gas	B	II
Control system	Data acquisi-tion	Down	Loss of data	A.	Immediate restart	B	II
	Facility control	Down	Loss of control	A	Dual system	B	III

2.7.4.4 Results And Findings

A number of malfunctioning events of the utility supply of the conventional facility are found to cause serious safety problems in the entire facility. Interlocked actions are expected to be effective and an important measure against such events. Each subsystem is required to consider the effects of these utility failures.

2.7.5 RAM Considerations

The conventional facilities are responsible for the supply of all electrical power, operational heat rejection, and plant HVAC.

Electrical power in the form of high voltage AC is supplied by the facilities from the grid across a local substation. Properly designed electric power supplies are highly reliable. Providing redundancy at such a high power would be very costly. An emergency diesel electric generator, however, is being considered to maintain essential loads in the unlikely event of the grid interrupt or substation failure. Also, backup battery systems shall be used to provide uninterruptable power supply to all the facility control systems.

The heat rejection system shall include a cooling tower and a circulating water system with pumps, pipes, fittings and valves, water treatment system, etc. Ample margin shall be provided in this system to assure full availability. Redundancies of key elements such as certain pumps shall permit maintenance and repairs to be performed without the need to stop the operation of the linear accelerator.

Plant heating and ventilation subsystems shall contain multiple redundancies. Regular maintenance shall ensure full availability of this subsystem.

2.7.6 Shielding Considerations

The general shielding design criteria applicable to IFMIF are briefly described. The scope is to identify for each facility complex all the potential neutron and gamma sources and the shielding structures to protect personnel during operation, as well as the local shielding for maintenance and in-service inspection, if required.

2.7.6.1 Radiation Sources

2.7.6.1.1 Test Cells

Major radioactive sources in the Test Cells include the intense neutron radiation from the D-Li interaction, the induced prompt gamma radiation, and the gamma radiation from media activated by deuterons and neutrons. A well-defined neutron distribution in energy and polar and azimuthal angle is already available, even if some uncertainties still exist on total strength and spectrum.

Because of the very high neutron flux during operation, special attention will be reserved for the choice of appropriate materials for all the Test Cell structures to reduce their potential activation and contamination.

2.7.6.1.2 Service and Hot Cells

The most important sources inside the various service and hot cells are the gamma rays from the high-activated test modules, VTA, and Li-target system to be considered during their handling for maintenance and substitution and during the experimental tests. Furthermore, in the access cell, also, the gamma source because of the activated NaK and its impurities (even including the corrosion products of the NaK loop) must be calculated and taken into account in shielding calculations.

2.7.6.1.3 Lithium Process Cells

In the rooms devoted to house the lithium loop and its ancillary systems, various gamma sources are present. All of them are due to the neutron activation in the Test Cells and are briefly summarized as follows:

- lithium activation,
- corrosion products activation,
- by-products (e.g., beryllium-9), and
- lithium impurities.

It must be pointed out that the process must determine the distribution and accumulation of impurities and corrosion products along the lithium loop and identify the need for filters and traps.

2.7.6.1.4 Accelerator Complex

Major radiation sources in the accelerator complex include gamma rays from activated components and coolant, X rays from the injector, as well as the radio frequency equipment and neutrons from the interaction of deuteron loss with the accelerator components. Other important losses are expected in the binding magnets located in the beam turning room. The radiation sources in the accelerator complex are strongly affected by characteristics of the beam loss, such as amount of beam loss, energy level, locations, and distribution. The neutron yield from beam loss also depends upon the target material and the angle of incidence; thus, special attention will be reserved for choice of appropriate materials.

2.7.6.2 Shielding Materials

Materials of construction for the IFMIF shielding structures will conform to current standards. For the time being, the following materials are foreseen:

- commercial concrete,
- high-density Concrete (limited use),
- soil,
- steel,
- lead, and
- hydrogenated and/or borated materials, such as borated polyethylene.

For each of them, standard density and chemical composition will be used in the shielding design calculations.

2.7.6.3 Shielding Structures

2.7.6.3.1 Test Cell Complex

The structures of the Test Cell complex must provide neutron and gamma shielding for the accessible areas in which personnel work during operation. The penetration towards the isolation area must be designed to limit the neutron activation of the final optics of the accelerator, located in the beam turning room. A specific beam dump for the back-scattered neutrons from the Li-target will be foreseen in the isolation area.

2.7.6.3.2 Service and Hot Cells

The structures of the service and hot cells must provide gamma shielding for the adjacent accessible areas in which personnel operate during the test module, VTA, and Li-target system handling. Particularly, the PIE cells will be shielded with respect to the gamma source coming from the highly activated specimens during the test experiments.

Shielding barriers of the access cell should also take into account the gamma source because of NaK and its impurities.

The walls between adjacent cells must provide shielding in case of personnel access for maintenance with the presence of activated components in the adjacent cells.

Windows, manipulators, and other penetrations will be designed to guarantee the same shielding as the concrete structures.

2.7.6.3.3 Lithium Cells

The lithium cell structures must provide shielding during operation from gamma sources because of activated lithium, highly-activated impurities and corrosion products in the primary loop.

Some specific shields could be necessary for some components such as traps, filters, and exchangers in which accumulation of highly activated materials is foreseen. These shields will limit the dose rates during maintenance operations at shutdown.

2.7.6.3.4 Accelerator Buildings

The walls, floor, and roof of the accelerator halls must provide shielding during operation with respect to the neutron and gamma sources from the different components of the accelerators produced by beam losses. Since it is foreseen that access to one accelerator hall can be shutdown while the adjacent accelerator is in operation, the intermediate wall must have the same shielding properties.

Local shielding inside the accelerator halls is required to protect personnel during ion-source substitution. Also, the concrete labyrinth between the accelerator halls and the adjacent accessible area must be carefully analyzed.

Analogous shielding and activation problems are foreseen for the beam turning room. Furthermore, the neutron back-streaming from the Li-target through the penetrations of the isolation area might make an extra contribution to the activation of the final optics of the accelerator.

2.7.6.4 Dose Rates in Normally Inaccessible Areas

Generally, the dose rates at shutdown in rooms which are normally inaccessible during operation will be higher than the design equivalent dose rate in normally accessible areas. Therefore, the assessment of such dose levels may have a significant impact on the facility global dose and, thus, overall number of personnel.

The rooms in which this contribution to the total dose may be significant are:

- Test Cell access room [if accessible --> (TBD)],
- lithium cells,
- accelerator halls, and
- beam turning room.

To limit these equivalent dose rates, some extra shielding could be necessary for some highly-activated components (traps, exchanger, accelerator components, etc.).

2.7.6.5 Nuclear Data and Codes

Only validated nuclear data will be used in the shielding design according to the QA requirements. Future availability of a specific IFMIF nuclear data library will allow reanalyzing of the shielding calculations in light of more accurate nuclear data.

The shielding calculations will be performed making use of international known and validated codes (either Monte Carlo or discrete ordinate particle transport codes). All the needed modifications to the original code versions will be tested accurately on simplified test problems.

2.7.7 Construction

Construction of the conventional facilities will be planned and managed according to the normal arrangements of the host country. Generally, a single general contractor will be given the task of managing the site preparation, conventional construction, and coordination of operating systems installation. Subcontractors will be employed and managed by the general contractor to complete specific tasks in the most efficient manner.

The construction of IFMIF will be phased to match the critical path delivery of the operating systems, primarily the accelerators. The overall project schedule provides guidance as to the time scale of the project.

During the construction phase, sufficient time should be allowed for access and operation of large equipment and for construction operations on separate buildings, simultaneously. Temporary site power, heating steam, lighting, water, and roads will also be required.

The operating systems will be assembled and tested at off-site locations to the maximum possible extent. This will reduce the risk and installation time. The major exception to this approach is the accelerator that will have to be completed at the IFMIF site prior to final testing. Thus, the accelerator halls will be the first building complex to be completed and will have final verification of its system while the remaining facilities are completed.

The plant services components will be assembled and tested at the factories prior to shipment to the IFMIF site. Verification of the service reliability and maintenance procedure will be included in the factory testing program. The facility will oversee and assist the vendor with the installation, testing, and startup of the services on the site.

2.8 CENTRAL INSTRUMENTATION AND CONTROL SYSTEM

This section describes the performance, configuration, development, and acceptance requirements for the Central Instrumentation and Control System of the International Fusion Materials Irradiation Facility.

2.8.1 Requirements

2.8.1.1 General Control System Operational Requirements

The IFMIF will be operated from a single, integrated Central Control System that will perform all data acquisition and control tasks during all project phases. The system will be automated to the extent that relatively few trained operators can operate and maintain the system. The Control System is to be available and used during the following project phases:

- equipment checkout – supporting rapid prototyping for checking equipment on test stands prior to installation in the IFMIF;
- installation and check-out – verifying correct operations of equipment, beamline, and target components and perform calibration or characterization during installation;
- commissioning – providing the necessary levels of control to support commissioning of the accelerator, target, and test assembly. Automation of low-level tasks is necessary to lessen operator workload; and
- operation – performing integrated control from a central control room and high-level, automatic control. The system also supports system maintenance and trouble-shooting.

The Supervisory Control System will provide the following control capabilities:

- provide set point control for designated subsystems; provide state sequencing through STANDBY to READY to RUN and return to STANDBY; and perform designated functions (e.g., test, conditioning, run-time, and shutdown) based on the current state and mode via either Central Control Computer (CCC) or local controller;
- acquire, process and display IFMIF system status, beam performance, and operating parameters necessary for individual subsystem and centralized operator control of system operation in each of the system modes, and verify designated parameters against limits providing prompt notification of each limit exceeded;
- automatically, and/or in an interactive manner, start-up and control the operation of the equipment from the STANDBY state, including an automatic control mode capable of:
  - full and partial system operation;
  - system start-up from standby to steady-state operation and return to standby;
  - operation of each of the subsystem controllers;
  - operator programming of operational parameters;
  - generating synchronized operations timing signals based on a preprogrammed sequence;
  - distributing signals to injector, RF power, accelerator, test cell, target, beam calibrator, diagnostics, and the safety system to initiate and control beam firing and diagnostic data gathering sequences; and
  - providing timing for fault data acquisition including post-fault period;
- produce various types of beam pulse patterns (pulsed and continuous operation for multiple beamlines, and generate and distribute IFMIF system timing pulses for synchronization of subsystem operations and measurements;
- provide a hardwired fast-protect function to shut down the beam upon detection of a condition that endangers the system;
- provide a run-permit function that shall continually monitor the state and performance of all the critical subsystems functions. It shall inhibit the initiation of, or shutdown, the beam operation in a safe manner if there is a fault or unsafe condition;
- provide acquisition, formatting, storage, and concurrent archiving of time-tagged diagnostics data, status data, and values of plant performance parameters;

- select and format upon command, subsets of stored diagnostic, status, and performance data for quick look, display in near real-time, and post-run data analysis;
- provide capability to generate hard copy of real-time or archived data and display on a compatible printer. Any of the subsystem or central control monitors shall have the capability to send output for printing to the graphics or line printer;
- provide fault detection and recovery at which a predefined set of faults will initiate sequential control recovery processes;
- provide model-based control. High-level control decisions will be made by comparing system operation with results from on-line models of the system. The model may use actual system data, parameters from a database, or a combination of the two;
- provide optimization logic. The operation of the accelerator is optimized by set-point adjustment and possibly state changes to achieve optimum performance. This level requires extensive study of the accelerator parameter space. Algorithmic optimization will be implemented by continuous control mechanisms. Optimization requiring state transitions will be implemented by the sequential control mechanism. Adaptive optimization may be implemented with neural-network technology.

2.8.1.2 Subsystem Control

The subsystem controller will monitor and control the basic functions of the accelerator, accelerator subsystem (e.g., source/injector, RFQ, DTL, HEBT), RF power, deuterium beam transport, lithium target, and test assembly. All major auxiliary functions and utility services will also be monitored and controlled.

The subsystem shall perform the following functions:

- service the supervisory control, status, and graphics monitors;
- perform overall system supervision and process and distribute operator commands to the respective subsystem controller for execution;
- acquire subsystem status, interlock, diagnostic data, and facilitate data base management;
- provide a supervisory control mode capable of:
  - remote control of designated parameters,
  - remote integrated operation,
  - data collection and display,
  - handling real-time interrupts, and
  - monitoring and display of alarms and trend;
- provide an automatic control mode capable of:
  - remote system operation;
  - automatic system start-up from STANDBY to steady-state operation and return to STANDBY;
  - autonomous operation of the subsystem;
  - operator programming of operational parameters;
  - generating operations timing signals synchronized with a supervisory control master timing signal based upon a preprogrammed sequence;
  - distributing signals to subsystem as integral component of accelerator, Test Cell, or facility, diagnostics, and the safety system to initiate and control beam firing and diagnostic data gathering sequences; and
  - providing timing for fault data acquisition including post-fault period;
- provide capability of commanding simultaneous data logging at each subsystem controller and the CCC;
- monitor the central safety and interlock system; and
- transfer data to and from the subsystem controllers via the local area network (LAN).

2.8.1.3 Operator Interface

This subsystem shall provide the following functions:

- selectively monitor and display the accelerator and supporting subsystem facility status in alphanumeric and/or graphical form;
- convert all data to appropriate engineering units for display;
- enable operator control of the configuration and modes of operation of the accelerator and supporting subsystems. Command menus shall provide operators with a complete input command set;
- generate and save control menu display;
- enable interactive determination and adjustment of set point values in order to achieve desired accelerator performance;
- initiate and abort predefined operation sequences;
- indicate and log faults and exceptional conditions;
- select data that will be viewed, printed, and archived;
- enable off-line modification of the signals shown on each display screen;
- continuously display complete facility and beam interlock status;
- selectively retrieve and display historical data in alphanumeric and/or graphical form;
- obtain hard-copy of data and displays; and
- provide ability to transfer any archived or logged data files to or from any computer terminal connected to the communications network.

2.8.1.4 Communications Subsystem

The subsystem shall:

- support file transfer protocol and
- command transmission from the CCC to subsystem controllers and transmission from subsystem controllers to CCC during operation.

2.8.1.5 Accelerator Instrumentation

The accelerator instrumentation concerns the functional sensors that address system and operational diagnostics and logic interlocks for fast beam interrupt and other safety configurations. This instrumentation comprises the component level hardware and software necessary for individual accelerator subsystem (Injector, RFQ, DTL, HEBT, RF power), as well as integrated accelerator system measurement, diagnostics, and control.

Accelerator instrumentation utilizes direct and implicit sensors and integrating analyzers and display panels:

- beam characterization – current toroid, scanner, beam emission diagnostic, laser emittance scanner, striplines, calorimeters, ionization tubes and gauges, scraper pickups, residual gas analyzer, cavity temperature sensors (thermocouples), IR camera, beam position diagnostic sensor, capacitive pickups, spark detectors;
- source – gas load, temperature, and internal pressure, beam alignment sensors, solenoid power level, and temperature;
- RF power – cavity field level pickup loops for RF field phase and amplitude control, X ray end point monitor to calibrate RF field voltage;
- support services, slow sampling analog gauging – inlet/outlet coolant pressure, inlet/outlet coolant temperature, coolant flow rate, vacuum pressure, high-pressure discrete valve status indicators for coolant, vacuum, exhaust;

- power distribution and content indicators – prime power, RF power, magnet power, auxiliaries (power supplies, computers, etc.) gauging, ground indicator;
- status panels for accelerator subsystems and utility services, interlocks; and
- signal conditioning and lines.

2.8.1.6 Test Cell Instrumentation

Test-end measurement and control requirements are met by three basic instrumentation subsystems: deuteron diagnostics, lithium diagnostics and test assembly position monitors, and radiation detectors. Neutron radiation detection system feedback to facility control is to be minimized, and primary reliance is placed on deuteron beam and lithium stream measurements.

Requirements for instrumentation:

- adequate measurement and analysis speed, resolution, and dynamic range for use as part of the on-line facility protect system;
- compatibility with test cell maintenance procedures and remote handling capabilities;
- noninterference with test assembly placement and manipulation in the high-flux zone;
- nonperturbing to deuteron beam and tolerant to beam damage;
- tolerance of intense, high-energy radiation flux;
- tolerance to high absorbed dose to allow for complete single cycle (9 month) life;
- resistance to lithium chemical attack, where necessary;
- usable at high temperature; and
- insensitive to high level, ambient rf background noise.

2.8.1.7 Facility Instrumentation

The accelerator instrumentation addresses the status, monitor and control functions and the actuation command functions for test, commissioning, and operations. It includes diagnostics and logic interlocks for direct-acting, hard-wired safety configurations. These diagnostic response systems comprise the:

- plant interlock system providing direct actuation to vacuum pressure and coolant status trigger signals, response time = 20-50 ms, typical;
- personal access safety system limiting area access during operation and fault conditions
- Fast Beam Interrupt System providing direct beam system control to controller signals of beam position, cavity over-temperature, or rf to trigger response configuration; Implemented over fiber-optic duplex link, typical response times for:
  - excessive beam spill or misalignment, radiation level exceeding specification, 50 ms, reapplied in 100 ms; and
  - excessive temperature rise in cooling system, 100 ms.

Figure 2.8.1-1 depicts the control flow for the central system.

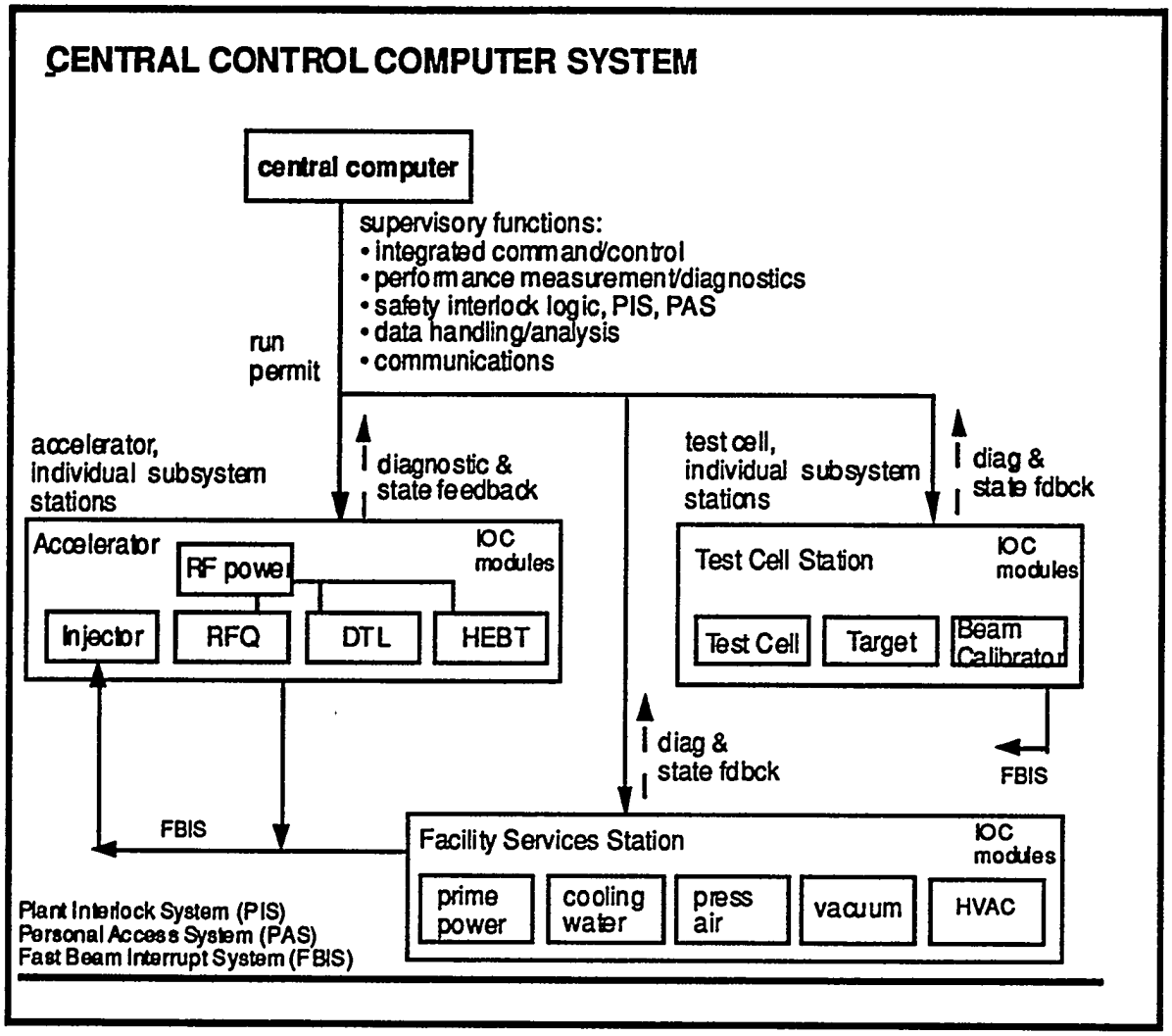

Fig. 2.8.1-1. Central Control Computer System

2.8.2 System Description

2.8.2.1 Central Control System

The Central Control System for the IFMIF will be based on commercial hardware and existing control software such as the Experimental Physics and Industrial Control System (EPICS). This type of software contains a common set of tools and a run -ime environment that provides a base for building control for experimental physics applications.

2.8.2.1.1 Central Control System architecture

The Central Control System shall consist of the following:

A. Supervisory control:

- CCC including computer hardware and associated racks, storage devices, power supplies, interfacing modules, and cabling;
- software, including
  - operating system
  - test/operation controller application (EPICS);
  - high-level language and compiler (e.g., FORTRAN, C++);
  - network communications and control software;
  - provision for automatic and preprogrammed operation;
  - provision for safety monitoring and control logic; and
  - analysis and presentation software applications;
- operator interface station provided to allow integrated monitoring and control of the IFMIF beam generation and diagnostic functions;
  - control and status monitor and keyboard;
  - supervisory graphics monitor and keyboard;
  - status board drive;
  - I&C contractor-supplied status board; and
  - printer;
- communications providing a path between the computers, workstations, and processors that constitute the subsystem including:
  - LAN (e.g., Ethernet TCP/IP network). Fiber-optic network links are used where electrical isolation is required;
  - I/O controller and interface modules (analog, binary, timing, stepper motor, waveform recorder, and video); and
  - software drivers;
- data retrieval and retention;
  - analog-to-digital sensors; and
  - large scale hard disk storage;
- connection detail.

B. Accelerator, test area, facility I&C control:

Each subsystem controller shall be an independent computer substation consisting generally of:

- computer hardware and associated racks, storage devices, power supplies, interfacing modules cabling, command and data links to controlled and/or monitored equipment;
- software including operating system, data dictionary to logged data and associated system communications and control software;
- processor and monitor for operator interfacing including a separate graphics monitor; and
- stand-alone system for designated real time monitoring, control or data acquisition tasks.

Central control support for each subsystem shall consist of:

- I/O controller boards and interface modules necessary for accelerator control, measurement, and diagnostics,
- I/O controller boards and interface modules necessary for test cell control, measurement, and diagnostics;
- I/O controller boards and interface modules necessary for target/beam calibration and diagnostics; and
- components and subsystems necessary for utility/facility measurement and regulation.

C. Safety I&C control

The safety control logic shall provide:

- automatic and operator control and monitoring of equipment safety interlocks,
- access controls to provide an integrated safety system incorporating a plant interlock system,
- personnel access interlock system, and
- fast-protect interlock system for the assembled IFMIF.

2.8.2.1.2 Central Control System Performance

Central Control Systems shall be capable of states, levels of control, and modes of operation that shall accomplish the objectives of IFMIF commissioning, operations, and decommissioning phases. All states and modes are to be applied to multiple beamline operation.

2.8.2.1.2.1 States

The I&C subsystem can be in one of the following states:

- OFF – all computer systems are switched off. All computer outputs are off. No plant monitoring or control is available from the I&C system.
- SHUTDOWN – I&C computer systems are running, but no I&C software is active. The subsystem monitors can be used as terminals, through the computers, so as to allow low-level testing of specific components via RS232 communication links.
- STANDBY – all I&C software is active. In this state, all prime power, subsystem power, supplies, cooling, and vacuum systems are prepared, turned on, stabilized, and under control of, or monitored by, their respective subsystem controllers. All safety interlocks are operational. Communication with each subsystem controller is via its respective subsystem monitor, or over the LAN link via the CCC. This allows the operator to set control parameters and timing sequences, check plant status, display wave forms from previous operations, and change state to READY. STANDBY is the normal state to which the system would be returned between operations.
- READY – the facility shall enter this state on receiving a signal from the CCC. All subsystem parameters are set-up, timing data loaded, control outputs enabled, all interlocks activated and all subsystems are waiting for the sequence trigger signal to initiate instrumentation, data collection and transition to the next state. The READY state shall be initiated from the STANDBY state.

- RUN – a preprogrammed sequence controlled by the timing system that includes warm-up, stabilizing, and sequencing. An operational sequence may consist of a single pulse, multiple pulses, or continuous operation. At RUN state, all IFMIF systems and subsystems are operating to produce the beam and accept beam into the test cell to the target. The beam pulse will have a duration, frequency and current level preset by the operator. During this state, the operators can display selected data. This state will be exited by a fault condition, end of sequence, or beam-off.

2.8.2.1.2.2 Levels of control

Three levels of control are to be provided:

- Level 1, plant or local component level (e.g., power supply): Control at this level is used for component checkout, maintenance, local testing of equipment, and troubleshooting. All control functions are performed via plant local control panels. The subsystem control console can be used to monitor and display plant status where a data link is available. No beam operation shall be permitted at this level. Change of control level from local plant controller to remote operation shall be by means of a physical switch at the local controller.
- Level 2, subsystem control level: At this level the subsystem control console controls designated components of the subsystem, performing those functions specified in Sect. 3.7 below. Beam operation is not permitted in this configuration except for the injector system via the local controller, and then only if the injector is isolated from the RFQ. Change of control from CCC level shall be enabled from the local.
- Level 3, CCC level: This level is used for full beamline operation. Sequencing between STANDBY, READY, AND RUN is provided by the CCC. Control of the IFMIF beamline and Test Cell can be distributed between the subsystem control consoles and the CCC. No control function will be available at two places simultaneously. Change of control from CCC level to selected subsystem controls shall only be possible from the CCC.

At each level, change of control may take place only if the necessary safety conditions are satisfied.

2.8.2.1.2.3 Modes of operation

The subsystem shall have two modes of operation:

- Manual: This mode shall allow changes of set points to be supplied directly by an operator from any of the three I&C levels of control. Manual control during beamline operation is only allowed from a subsystem controller to include beam steering parameters (including multiple beamline commands), RF power set points, and injector set points.

- Automatic: Automatic mode shall consist of sequential control of the transitions required to change the state of the beamline(s). The operator or an executive sequence can initiate these changes. Automatic start-up from a standby state, operation, and return to a standby state are accomplished through this mechanism. This mode shall provide either pre-programmed set points from a sequencer, or set points generated within a predefined program. The automatic mode shall permit manual mode override at selected times during nominal operation.

2.8.2.2 Accelerator Instrumentation

Primary accelerator instrumentation includes:

- beam characterization sensors and analyzers:
  - current toroid scanner,
  - beam emission diagnostic ,
  - laser emittance scanner,
  - striplines,
  - calorimeters,
  - ionization tubes and guages ,
  - scraper pickups,
  - residual gas analyzer,
  - cavity temperature sensors (thermocouples),
  - IR camera,
  - beam position diagnostic sensor,
  - capacitive pickups,
  - spark detectors,
- source analog sensors:
  - gas load,
  - temperature and internal pressure,
  - beam alignment sensors,
  - solenoid power level and temperature,
- RF power monitors:
  - cavity field level pickup loops for phase and amplitude control, and
  - X ray end point monitor to calibrate RF field voltage.

2.8.2.3 Test Cell Instrumentation

2.8.2.3.1 Beam position and profile measurement

Measurement of the beam position and profile during all stages of operation is important for safety and for characterization of the target and Test Cell dose patterns. The philosophy for safety measurements is to provide redundancy by using several different physical methods to generate potential beam-off signals.

2.8.2.3.2 Beam centroid measurement

The beam centroid will be monitored by conventional centroid position and phase monitors adapted to the rf frequency and beam pipe dimensions of IFMIF. This type of monitor operates by sensing the rf electromagnetic fields produced by the beam bunches. If the beam is debunched in the HEBT to essentially dc, special monitors may need to be developed. These monitors will be installed along the linac and HEBT up to the final shield wall.

2.8.2.3.3 Beam edge measurement

The beam edge can be measured by inserting metal plates into the beam pipe from the outer periphery that would normally intercept only a very small fraction of the beam. Such plates would ordinarily be four in number at each location – two horizontal and two vertical, but special segmented arrangements could be used to give more information about the shape, e.g., in the beam tailoring region and final expansion to the target. If the beam deviates in position of rough profile, more particles will be intercepted on some plates, and turn-off signals can be generated. These measurements and signal generation can be very fast (ms response) and sensitive to very small changes in signal level.

2.8.2.3.4 Beam loss radiation measurement

Beam-loss radiation monitors will be placed along the accelerator, HEBT, and in the target vicinity. Typical monitors are gas-filled cable types or scintillation detectors. Such monitors have fast response and gain adjustable over several orders of magnitude dynamic range. Trip levels are set to enforce maximum prompt radiation levels during operation.

2.8.2.3.5 Neutron dosimetry measurement

The recommended minimal program is passive neutron radiography supported by neutronics calculations and time-history flux monitors. The need for an active, two-dimensional neutron source imaging system is also recognized, and development is supported if funding permits, but such a system is not considered absolutely necessary for dosimetry purposes and thus is not included as part of a minimal program.

Passive dosimeters include radiometric foil monitors, helium accumulation flux monitors, solid-state track recorders, and passive radiographs that require counting and analysis away from the test-end.

Time-history neutron flux monitors can have fast response times and are important for both accelerator control and dosimetry. Special considerations are necessary for use in the IFMIF Test Cell.

2.8.2.3.6 Neutron Radiography

Neutrons backstreaming from the target are imaged using pinhole optics.[1]

2.8.2.3.7 Gamma-Ray Radiography

Similar to neutron radiography.[1]

2.8.2.3.8 Spot-on-target viewing

Spot-on-target viewing by soft X ray, optical target surface emission imaging, and IR spot scanning were considered in ref. 1 within the range of feasibility if background emissions are not too severe.

2.8.2.3.9 Beam profile measurement

Beam profile monitoring is a difficult development task. Nonintercepting methods are needed for intense, cw beams. Candidates for profile monitors in the linac or HEBT include monitoring light from background gas scattering and flying-wire monitors at selected locations, with minimum-projection tomographic reconstruction. Beam-on-target profile monitoring should be accomplished by several different physical methods for safety redundancy.

Scanning wire (flying-wire) probes could be used but radiation damage to components creates formidable design problems.

Residual gas ionization collection on grid structures located near the beam tube wall did not look too promising.

Monitoring of residual gas glow was studied thoroughly, is considered feasible,[1] and is depicted in the referenced layout.[2]

2.8.2.4 Facility Instrumentation

Primary control, status, and actuation instrumentation includes:

- support services, slow sampling analog guaging;
  - inlet/outlet coolant pressure;
  - inlet/outlet coolant temperature;
  - coolant flow rate;
  - vacuum pressure;
  - high pressure; and
  - discrete valve status indicators for coolant, vacuum, exhaust;
- power distribution and content indicators;
  - prime power;
  - RF power;
  - magnet power;
  - auxilliaries (power supplies, computers, etc); and
  - ground indicator
- status panels for accelerator subsystems and utility services, interlocks;
- signal conditioning and lines;
- safety sensor and signal transmission to plant and central control for:
  - personnel entry;
  - accelerator and Test Cell fault detection;
  - fire detection and control;
  - explosive or toxic gas detection;
  - radiation detection of RF, gamma, neutron and X ray emissions;
  - hardwire interlocks and relays; and
  - logic interlocks to central I&C.

2.8.3 Interfaces and Interface Issues

The Central Control System monitors, directs, and controls almost every aspect of the facility, including component hardware, integrated subsystems, beamline, Test Cell and target, facility and utility supply, testing, operations, and safety provisions. The system provides the communications backbone for diagnostics, control and data retention. As such, it interfaces with the facility in all areas and at all levels. The physical interfaces include mechanical mounting provisions, electrical connections, and shielding. The signal interfaces include LAN, serial or parallel data bus for digital or analog data transfer, and hard-wired signal lines for beamline interlock.

The command and control system, through the centrol computer, functionally provides:

- command – system command and control at integrated system, subsystem, facility levels;
- communication – LAN, annunciators, hardwire, safety logic;
- diagnostics – instrumentation, status boards and monitors, control modules;
- data collection – high speed/capacity, transmission, retention, analysis, documentation; and
- safety – limiting control and response logic.

The CCC interfaces, through the LAN, with subsystem controllers, operators, accelerator systems (injector, RFQ, DTL, HEBT, RF subsystem), the Test Cell, the target, the beam calibrator and the facility, including support utilities.

Predicated on existent requirements, there are no significant equipment issues. Capture and transmission rates, and performance parameters, are considered within the capabilities of available sensors, diagnostics, computers, and networks. However, requirements for long-life sensors and diagnostics within a severe operational/test environment is a concern with respect to shielding, maintenance, and replacement.

2.8.4 Safety Considerations

Implementation of the following safety subsystem functions – in conjunction with appropriate monitors, regulators, and procedures – is to provide for a functional personnel, beamline, Test Cell, plant, and environment safety I&C system:

- hardwired interconnections between individual subsystem or plant interlock sensors and an integrated central safety and interlock system prohibiting IFMIF system operation under conditions endangering the safety of personnel or equipment;
- shutdown commands to active beamline subsystems and supporting subsystems in time to insure safety of personnel and equipment. The response time shall be dependent upon the nature of the fault;
- interlock status display identifying current status of all subsystem interlocks;
- hardwired interconnections between designated subsystem and beamline sensors and beam interlock system;
- logic interlocks between a system of door-key logic, HV switches, isolators, warning lights, signs, horns, and emergency switches required to provide personnel protection by controlling access to areas that contain hazards because of high voltage, radiation, etc. within the IFMIF facility;
- signal filtering for selected signal channels to prevent inadvertent shutdown because of signal noise or transient conditions; and
- logic to accept signals from independent fire, radiation, and hydrogen gas detection systems.

2.8.5 RAM and Quality Considerations

2.8.5.1 Reliability

The system and integral components shall be designed with the objective operating reliability such that the system downtime is minimized. Reliability shall be achieved by several techniques. Extensive design verification, testing, and simulation will be performed on the hardware and software. Critical redundant computer nodes will be used where practical, and the software will transfer control from the primary node to a backup when a fault is detected. Hardware redundancy will be used in critical input-output areas. The operating status of the supervisory control system will be loop tested before each start-up and continuously monitored.

Equipment and software reliability is a basic demonstration requirement for the process control systems. Commercial-off-the-shelf systems are preferred but only where capability has been amply demonstrated. To support commissioning and testing and to provide fault designation, all—especially beam diagnostics—instrumentation front ends shall be designed with a built-in, remotely operable functional test and calibration.

2.8.5.2 Availability

The availability of the Central Control System shall exceed 99.5% during normal operations. This level is necessitated by the considered availability of the large number of front-end controllers, in-line computers, and ancilliary equipment in the IFMIF beamline, test area, and facility.

2.8.5.3 Maintainability

Ease of subsystem and component removal and replacement during integration and tests, system commissioning, and demonstration shall be a design goal. Expendable equipment that requires replacement (i.e., filaments, pressurants, etc.) shall be designed for ease of serviceability. To the extent possible, access to and provisions for adjustment, testing, and monitoring test points shall be incorporated.

The subsystem shall provide hardware and/or software features that enable the operator to run confidence tests of the system memory, hard disc, floppy disc, communications links, and external I/O equipment. For checkout of the communications links and the external I/O equipment, loop-around tests would suffice.

2.8.6 Fabrication, Assembly, and Installation

The IFMIF Central Control System will be procured emphasizing as much as possible commercial-off-the-shelf computer hardware and software, network equipment, interface hardware, sensors, and integrating displays. A "turn-key" contract with a commercial vendor, including all phases of system design, assembly, integration, testing and start-up, will be considered to minimize schedule and integration risk.

2.8.6.1 Environmental Conditions

The subsystem shall be designed for operation to specified performance in an enclosed area with heating and air conditioning with the temperature controlled to 70° ± 5°F.

2.8.6.2 Materials, Processes, and Parts

The contractor shall select materials, processes, and parts to implement the design and construction of the subsystem to meet the performance and demonstration goals specified.

2.8.6.3 Electromagnetic Radiation

The susceptibility of the subsystem, subsystems, and components to the electromagnetic environment of the operational IFMIF shall be controlled to within acceptable limits by implementation of design practice requirements specified in the individual procurements specifications.

2.8.6.4 Bonding

The subsystem, subsystems, and components shall be electrically bonded to the electrically conducting structure. Aluminum surfaces utilized for electrical bonding paths shall be protected from corrosion by chemical films.

2.8.6.5 Workmanship

The subsystem and components thereof shall be constructed in a thoroughly workmanlike manner. Particular attention shall be given to neatness, welding and brazing, plating, finishes, painting and machine operations, screw assemblies, and freedom of parts from burrs and sharp edges, or any other damage or defect that could cause unsatisfactory operation.

2.8.6.6 Replaceability

Mechanical and functional replaceability shall exist between similar items (assemblies, subassemblies, modules, components, and parts). A replacement item is one that is interchangeable with another item but which differs physically from the original item in that the installation of the replacement item requires operations such as drilling, reaming, cutting, filing, shimming, etc., in addition to the normal application and methods of attachment.

2.8.6.7 Transport and Storage

The components shall incorporate provisions for ground handling, storage, and transport. Fluid, pneumatic, and electrical connections or terminations shall be protected with caps and plugs. The components shall also be designed to be capable of transport/shipment by air and ground without damage or degradation. The planned packaging shall be compatible with the component design and transportation system to the extent that loads induced in the components during transportation shall not produce stresses, internal loads, or deflections resulting in damage to the component that will prevent the proper functioning of the component.

2.8.7 Development Requirements

The control system required for IFMIF can be based on proven systems currently in operation in many experimental and production facilities; consequently, no additional development is required. For example, EPICS is currently used at numerous national laboratories and in industrial installations to control complex scientific facilities. Over 100,000 lines of common source code are shared by these installations. The use of the same primary software at many installations has enhanced maturity and demonstrated reliability and performance through successive improvements based on hundreds of thousands of hours of operation. Although the basic functionality is complete, the software is flexible and extensible enough to handle site-specific requirements. Implementation of EPICS will reduce both schedule risk and cost.

2.8.8 Summary of Alternatives

Advances in computing power and technology have led to corresponding improvements in industrial control systems. It is anticipated that during the planning and design phases of IFMIF, significant improvements in commercially available equipment will provide viable, and cost effective, alternatives to the Central Control System and the facility instrumentation.

2.8.9 Phase II Development Tasks/Issues

Instrumentation and control system design tasks:

- specification of equipment– identify specific hardware (computer, controller, sensor) by type and use;
- performance requirements–quantify range, capacity, and response parameters, operational conditions and RAM parameters;
- location – specify number, location, and connection requirements; and
- system logic – define interface parameters, prioritorize signals, specify control logic for interlock, access, and interrupt systems.

In general the system equipment is intended to be commercially available hardware. In the Test Cell area however, the high fluence, temperature and long operational times required combine to limit the viability of some sensors. To some degree, development of enhanced sensor capability must be investigated through vendor experience data or actual test effort.

2.9 References

1. "FMIT Test-End Instrumentation Systems Scoping Study," HEDL TME 81-44, UC-20, FMIT files, p. 28, 31, 32.

2. "FMIT Beam/Target Diagnostics," Hughes Research Laboratories, February 1981, FMIT files, Box, p. 32.

3.0 ASSESSMENTS

3.1 SAFETY CONSIDERATIONS

3.1.1 Approach

The objective of this section is to provide an overview of considerations related to safety and support systems required for IFMIF. Although many of the design options of the IFMIF facility can be defined in detail in the later phases of the CDA, some of the decisions must be made in the early stage so that the integral facility concept, safety and design philosophy can be consistent. In the Li-target workshop in Tokai, a preliminary safety assessment of the lithium loop and entire target system of the IFMIF was presented and guidelines for the safety of the facility was discussed. It was agreed that it is necessary in the early stage of the conceptual design to identify the possible hazards and reflect safety assessments in the system design. The result will also be reflected in the site determination and site specific documentation. This section summarizes a Japanese consideration in the aspects of safety and integrity of the system of the IFMIF facility.

Several issues are identified in the aspects of safety as the major subjects to be considered in the design integration. They are;

1. Definition of the character of the facility,
2. Safety assessment and licensing,
3. Radiation safety,
4. Environmental impact,
5. Facility Integrity, and
6. Other hazards.

In this design work, the above issues are considered and some design options are proposed. In the selection of the concepts, the consistency of the entire facility should be maintained. Most of the subjects have not been discussed in any of the primary Facilities; Accelerator, Target, Central Control And Test, and also many are on the interface between the subsystems. Feedback of the information from the designers are strongly required to proceed this design approach.

3.1.2 Safety Elements

3.1.2.1 Definition Of The Character Of The Facility

IFMIF is a unique nuclear facility that does not specifically fit the current regulatory and legal structure. It is important to design the facility with maximum safety and minimize the potential hazards, while avoiding unnecessary over-design. ALARA and the latest standard of the nuclear safety should be strictly followed. Such a design is expected to demonstrate the safety of the entire facility, and eventually reduce legal obligation and related costs.

It is understood, as a consensus, that the IFMIF facility should not be regarded as "Nuclear Reactor" or equivalent, from the viewpoint of licensing and facility control. If it is treated as a "Reactor" for irradiation tests, a substantial effort, cost and time will be required to obtain approval for construction and operation. The IFMIF facility should rather be regarded as a research facility involving radiation and radioactive materials, because, although large number of neutrons will be generated, a criticality cannot occur.

It is unlikely that legislation for control and regulation of fusion reactors will come into effect before IFMIF is designed and built; however, the legal controls are anticipated to be similar, and should be consistent, because the characters of of IFMIF and fusion facilities are similar in operation and function.

A specific safety concern is the inventory of tritium. Recent fusion tritium facilities in Japan, US and EU are controlled under similar guidelines requiring multiple confinement of tritium depending on the inventory. Thus, IFMIF should limit maximum tritium inventory avoid unnecessary regulatory constraints.

3.1.2.2 Safety Assessment And Licensing

It is understood that a detailed safety assessment is possible only after a majority of the facility design has been completed, thus it is out of the scope of the CDA. Such an assessment is also needed for licensing purpose and will be strongly dependent on the local regulations of the selected IFMIF site. It is therefore suggested that analysis at this stage of the design be limited. However the participants of the CDA should be aware of possible site specific limitations that could potentially have strong impact on the design. Such factors include: radiation level at the site boundary, environmental release, and site radioactive inventory. Thus, in the CDA, the design should be sufficiently conservative to apply to all potential sites. Site specific requirements will be satisfied by the home team in the later stages of design.

3.1.2.3 Radiation Safety

Radiation safety will be considered both in normal operation and off-normal events. Shielding of radiation, particularly neutron around the Test Cell, is the most important issue in normal operation. Unlike fusion reactors, it is technically straightforward because the penetrations and ducts around the test cell are expected to be small and few in number.

Activation of the construction materials and equipment are anticipated to be the major source of workers' dose during the maintenance. Design of equipment to facilitate easy maintenance, and particularly remote handling systems, will have a major impact on the entire facility design. For instance, handling and exchange of Test Cell modules by remote handling devices will require some openings in the shielding and confinement of the Test Cell. Similarly, the target assembly will also require periodic replacement via remote handling means. Outside the Test Cell area, the accelerator and HEBT are of primary concern. While both may be generally accessible by operators when shut down some tasks may require special handling fixtures due to radiation sources resulting from local activation.

Confinement of radioactive material is especially important in the evaluation of hazards in off-normal events. Tritium, beryllium and other impurity elements in lithium are the dominant sources that can potentially be released to the environment. Minimization of inventory, separation and immobilization in chemical loop, and multiple confinement are the design requirements. Since the lithium loop is regarded as the primary source of these contaminates, tertiary containment will be used, including inert atmosphere and air-tight rooms.

It should be noted that there are extremely vulnerable boundaries between Li target and both beam line and test cell. This implies that special enclosures or boundaries are required for both the beam line and Test Cells to isolate them from target. Since the operation of the facility prevents a physical boundary between the beam line and target, differential pumping, a fast-acting isolation valve, and a sacrificial vacuum chamber will be use to prevent an accidental gas in-leak from Test Cell region. The Test Cell is separated from target with a thin backwall, in the event of backwall rupture, liquid lithium will escape to the Test Cell, thus, the Test Cell will be evacuated to balance the pressure and limit the escape of lithium.

3.1.2.4 Environmental Impact

Exhaust gas from the facility will be the dominant environmental impact in both normal and off-normal conditions, thus, all exhaust will be adequately processed prior to the discharge. Vacuum exhaust from accelerator and lithium target will contain tritium. In addition, the Test Cell and neighboring hot cells will have atmospheres contaminated by activated airborne contamination. In the accidents, gaseous effluents will be contained in the multiple confinement, and processed to remove all airborne activities. Other major releases of material from IFMIF to the environment will be related to the secondary coolant but, is expected to be relatively limited.

3.1.2.5 Facility Integrity

Buildings and utilities are one of the major issues to be decided in early design integration. Interface between the subsystems to be considered are, material flow, utility distribution, interlock and accidental scenarios, etc. For instance, loss of site power, accelerator and target failures, require different interlocked actions to prevent major failure.

The building layout will require service pipe orientations to avoid conflicts between subsystems. The remote maintenance system for the target and Test Cell, the lithium loop, and beam line are the major components to be integrated.

Design and quality assurance of the entire system will be coordinated by the host country to insure consistency.

3.1.2.6 Other Hazards

A lithium fire is the most significant failure which can occur in IFMIF consequently, lithium will be doubly contained. In addition, specific requirements of the host country will be considered.

A large amount of stored energy will exist in the accelerator system. Because this energy can be rapidly released the design will emphasis grounding and shielding of the beam and electrical systems.

3.2 ENVIRONMENTAL ANALYSIS

3.3 QUALITY ASSURANCE

3.4 SELECTION AND CHARACTERIZATION OF CANDIDATE SITE

The characteristics and requirements for a candidate IFMIF site will be one of the subjects for the April 1996 Design Integration Meeting.

4.0 PROJECT SCHEDULE

A tentative schedule with a facility startup date of 2004 was prepared early in the CDA process. Improved understanding of both the technical and funding requirements now enable the project to begin to develop a schedule representative of the IFMIF conceptual design.

A working draft of a proposed schedule will be prepared prior to the May 1996, Design Integration Meeting in Japan. The details will be reviewed during that meeting and the proposed schedule will be completed for the final CDA report.

5.0 COST ESTIMATE

5.1 Goal

A cost estimate for the baseline IFMIF facility will be prepared in accordance with the fabrication and construction plans outlined for each Facility in Section 2.0. The estimate will also be coordinated to match the proposed Project Schedule described in Section 4.0.

5.2 Procedure

In general the costing procedure for IFMIF will follow the arrangements used on the ITER project. The procedure can be summarized as follows:

5.2.1 The major systems (Test, Target, Accelerator, I&C and Conventional Facilities) will be costed separately to completion (ready for beam test) by the separate teams responsible for the systems. A common costing methodology will be employed for all the systems based on the WBS shown in the Appendix.

5.2.2 Costs will be determined in two ways; comparisons to the cost of recently constructed, similar facilities and by factors of known costs. "Bottoms-up" costing will be used only on a limited basis because the conceptual design has insufficient detail to support this approach. Note, that the WBS is shown in detail only to insure that all component of the IFMIF project are accounted for.

5.2.3 A common accounting system will be used by all groups to maintain consistency in the final estimate. The costs will be normalized in kilo international units of accounting (KIUAs) with conversions determined through agreement with all the parties and applied uniquely to the IFMIF project.

5.2.4 Cost for technology development, over and above the engineering development for the project will be estimated separately from the capital costs; but, included in the total estimated cost.

5.2.5 Operating costs beyond facility start-up will be estimated based on the projected number and cost of personnel, spare parts, electricity, utilities and capital.

5.2.6 A life-cycle cost analysis will be prepared based on the facility construction and operating costs. This analysis will potentially be used as a basis for future design decisions concerning types of equipment, operating scenarios and site selection.

Appendix

A preliminary WBS has been prepared as a cost estimate planning document to insure that all aspects of the IFMIF facility are accounted for and will be assigned design, cost and schedule responsibility. The cost estimate will not be performed at the level of detail shown.

Proposed IFMIF Work Breakdown Structure (WBS)

1.	*2.*	*3.*	*4.*	*5.*	*6. Level*
1.	**0.**	**0.**	**0.**	**0.**	**0. Project Management**
	1.	**0.**	**0.**	**0.**	**0. Project Management and Administration**
		1.	0.	0.	0. Administration
		2.	0.	0.	0. Cost Control
		3.	0.	0.	0. Schedule
		4.	0.	0.	0. Development Oversight
		5.	0.	0.	0. Construction Management
		6.	0.	0.	0. Documentation
	2.	**0.**	**0.**	**0.**	**0. Systems Engineering**
		1.	0.	0.	0. Design Integration
		2.	0.	0.	0. Systems Analysis
		3.	0.	0.	0. Requirements/Specs
		4.	0.	0.	0. RAM Analysis
	3.	**0.**	**0.**	**0.**	**0. Environmental, Safety & Health Documentation**
	4.	**0.**	**0.**	**0.**	**0. Quality Assurance**
2.	**0.**	**0.**	**0.**	**0.**	**0. Test Facilities**
	1.	**0.**	**0.**	**0.**	**0. Test Facility Management**
		1.	0.	0.	0. Project Management and Administration
			1.	0.	0. Administration
			2.	0.	0. Cost Control
			3.	0.	0. Schedule
			4.	0.	0. Documentation
		2.	0.	0.	0. Systems Engineering
			1.	0.	0. Design Integration
			2.	0.	0. Systems Analysis
			3.	0.	0. Requirements/Specs
			4.	0.	0. RAM Analysis
		3.	0.	0.	0. Environmental, Safety & Health Documentation
		4.	0.	0.	0. Quality Assurance
	2.	**0.**	**0.**	**0.**	**0. Test Facility Subsystems**
		1.	0.	0.	0. Test Cell
			1.	0.	0. Assembly and Testing
				1.	0. Assembly
					1. Assembly operations
					2. Assembly facilities
				2.	0. Testing
					1. Testing operations
					2. Mockup equipment
			2.	0.	0. Component Systems
				1.	0. Structure and Shielding
					1. Cell liner
					2. Nuclear heating control system
				2.	0. Beam Diagnostics Instrumentation Sensor Systems
				3.	0. Test array/Target interface assembly
				4.	0. Emergency shutdown system
				5.	0. Diagnostics
				6.	0. Nitrogen backfill system
				7.	0. Subsystem Power
		2.	0.	0.	0. Test Assemblies
			1.	0.	0. Assembly and Testing
				1.	0. Assembly
				2.	0. Testing
			2.	0.	0. Component Systems
				1.	0. Vertical Test Assemblies

Proposed IFMIF Work Breakdown Structure (WBS)

1.	*2.*	*3.*	*4.*	*5.*	*6. Level*
					1. Shielding plugs
					2. Test probes
					3. Test modules
					4. Viewing and lighting
				2.	0. Special Test Assemblies
					1. Containers
					2. Test modules
					3. Instrumentation/diagnostics
		3.	0.	0.	0. Test Cell Control Room
			1.	0.	0. Assembly and Testing
				1.	0. Assembly
				2.	0. Testing
			2.	0.	0. Component Systems
				1.	0. Structure
					1. Personnel entry
					2. Cell liner
				2.	0. Viewing and lighting
				3.	0. Transfer Cart
				4.	0. Transfer Rail System
				5.	0. Ventilation equipment
		4.	0.	0.	0. Access Cell
			1.	0.	0. Assembly and Testing
				1.	0. Assembly
				2.	0. Testing
			2.	0.	0. Component Systems
				1.	0. Viewing and lighting
				2.	0. VTA electrical controls
				3.	0. STA electrical controls
				4.	0. Data Acquisition
				5.	0. Positioner controls
		5.	0.	0.	0. VTA and Target Service Cell
			1.	0.	0. Assembly and Testing
				1.	0. Assembly
				2.	0. Testing
			2.	0.	0. Component Systems
				1.	0. Structure and Shielding
					1. Cell liner
					2. Equipment support structures
					3. Bridge crane support structure
				2.	0. Viewing and lighting
					1. Through-wall windows
					2. In-cell lighting
					3. Portable and manipulator mounted CCTV
				3.	0. Manipulator system
					1. Bridge crane
					2. M/S manipulators
					3. Power arm manipulators
				4.	0. Gas cooling system
				5.	0. Leak Detection
				6.	0. Hydraulics
				7.	0. Vacuum pumping
				8.	0. Test assembly check out/repair assembly
		6.	0.	0.	0. Utilities Hot Cell
			1.	0.	0. Assembly and Testing
				1.	0. Assembly
				2.	0. Testing
			2.	0.	0. Component Systems

Proposed IFMIF Work Breakdown Structure (WBS)

1. 2. 3. 4. 5. 6. Level

1. 0. Bridge Crane
2. 0. Viewing and lighting
   1. Through-wall windows
   2. In-cell lighting
   3. CCTV
3. 0. Personnel Access

7. 0. 0. 0. PIE and specimen encapsulation Hot Cell facilities
   1. 0. 0. Module Handling Hot Cell
      1. 0. Support facilities (viewing and lighting,manipulators,etc)
      2. 0. Module assembly station
         1. Visual inspection
         2. Leak detection station
   2. 0. 0. Specimen Welding and Encapsulation Hot Cell
      1. 0. Support facilities (viewing and lighting,manipulators,etc)
      2. 0. Packet and specimen welding
         1. Visual inspection
         2. Leak detection station
   3. 0. 0. Tensile Test Hot Cell
      1. 0. Support facilities (viewing and lighting,manipulators,etc)
      2. 0. Universal testing machines
   4. 0. 0. Creep-Fatigue Hot Cells (isothermal&thermomechanical)
      1. 0. Support facilities (viewing and lighting,manipulators,etc)
      2. 0. Universal testing machines
   5. 0. 0. Bend Bar/Fracture Toughness/Charpy Testing Hot Cell
      1. 0. Support facilities (viewing and lighting,manipulators,etc)
      2. 0. Instrumented testing machines
   6. 0. 0. Corrosion/Fatigue Testing Hot Cells (total of 2)
      1. 0. Support facilities (viewing and lighting,manipulators,etc)
      2. 0. Instrumented testing machines
   7. 0. 0. Fatigue Crack Growth Testing Hot Cell
      1. 0. Support facilities (viewing and lighting,manipulators,etc)
      2. 0. Instrumented testing machines
   8. 0. 0. Laser Profilometry (pressurized creep tube) Hot Cell
      1. 0. Support facilities (viewing and lighting,manipulators,etc)
      2. 0. Laser optics and leakage test devices
   9. 0. 0. Optical Microscopy Hot Cell
      1. 0. Support facilities (viewing and lighting,manipulators,etc)
      2. 0. Optical microscopes
   10. 0. 0. Scanning Electron Microscopy Hot Cell
      1. 0. Support facilities (viewing and lighting,manipulators,etc)
      2. 0. Scanning electron microscope

8. 0. 0. 0. Shielded Glove Box Laboratory
   1. 0. 0. Assembly and Testing
      1. 0. Assembly
      2. 0. Testing
   2. 0. 0. Component Systems
      1. 0. Glove Boxes
         1. Glove Box # 1
         2. Glove Box # 2
         3. Glove Box # 3
         4. Glove Box # 4
         5. Glove Box # 5
         6. Glove Box # 6
         7. Glove Box # 7
         8. Glove Box # 8
         9. Glove Box # 9
      2. 0. TEM

Proposed IFMIF Work Breakdown Structure (WBS)

1.	*2.*	*3.*	*4.*	*5.*	*6.*	*Level*
				3.	0.	Viewing and lighting
		9.	0.	0.	0.	Tritium Laboratory
			1.	0.	0.	Assembly and Testing
				1.	0.	Assembly
				2.	0.	Testing
			2.	0.	0.	Component Systems
				1.	0.	Glove Boxes
					1.	Glove Box # 1
					2.	Glove Box # 2
					3.	Glove Box # 3
					4.	Glove Box # 4
					5.	Glove Box # 5
					6.	Glove Box # 6
				2.	0.	Tritium Enclosure
				3.	0.	Viewing and lighting
		10.	0.	0.	0.	Test Cell Control
			1.	0.	0.	Assembly and Testing
				1.	0.	Assembly
				2.	0.	Testing
			2.	0.	0.	Component Systems
				1.	0.	Controls
				2.	0.	Instrumentation
				3.	0.	Cabling
		11.	0.	0.	0.	Data Acquisition System
			1.	0.	0.	Assembly and Testing
				1.	0.	Assembly
				2.	0.	Testing
			2.	0.	0.	Component Systems
				1.	0.	Main Computer
				2.	0.	Distributed Computers
				3.	0.	Software
	3.	**0.**	**0.**	**0.**	**0.**	**Subsystem Development**
	4.	**0.**	**0.**	**0.**	**0.**	**System Installation and Startup**
		1.	0.	0.	0.	Installation
		2.	0.	0.	0.	Verification Testing
		3.	0.	0.	0.	Startup
	5.	**0.**	**0.**	**0.**	**0.**	**Maintenance Systems**
		1.	0.	0.	0.	Maintenance Procedure Development
		2.	0.	0.	0.	Special purpose tooling
		3.	0.	0.	0.	Remote handling equipment
		4.	0.	0.	0.	Mockup Facilities and Testing

Proposed IFMIF Work Breakdown Structure (WBS)

1.	*2.*	*3.*	*4.*	*5.*	*6. Level*
3.	**0.**	**0.**	**0.**	**0.**	**0. Target Facility**
	1.	**0.**	**0.**	**0.**	**0. Target Facility Management**
		1.	0.	0.	0. Project Management and Administration
			1.	0.	0. Administration
			2.	0.	0. Cost Control
			3.	0.	0. Schedule
			4.	0.	0. Documentation
		2.	0.	0.	0. Systems Engineering
			1.	0.	0. Design Integration
			2.	0.	0. Systems Analysis
			3.	0.	0. Requirements/Specs
			4.	0.	0. RAM Analysis
		3.	0.	0.	0. Environmental, Safety & Health Documentation
		4.	0.	0.	0. Quality Assurance
	2.	**0.**	**0.**	**0.**	**0. Subsystems**
		1.	0.	0.	0. Lithium Target System
			1.	0.	0. Assembly and Testing
				1.	0. Assembly
				2.	0. Testing
			2.	0.	0. Components
				1.	0. Target Assembly
					1. Li Flow Rectifier
					2. Nozzel
					3. Backwall
					4. Down Stream Guide
					5. Measuring System
					6. Li System/Target Interface
				2.	0. Beam-Target Interface
					1. Beam/Target Interface Structure
					2. Evacuation System
					3. Emergency Shutdown System
					4. Test Cell/Target Interface Structure
		2.	0.	0.	0. Lithium Cooling System
			1.	0.	0. Assembly and Testing
				1.	0. Assembly
				2.	0. Testing
			2.	0.	0. Components
				1.	0. Primary Cooling System
					1. EM pump
					2. Heat Exchanger
					3. Valve
					4. Piping
					5. Quench Tank
					6. Dump Tank
					7. Control System
					8. Measuring Devices
					9. Radiation Shielding
					10. Inert Gas System
				2.	0. Primary Purification System
					1. Cold Trap
					2. Hot Trap # 1
					3. Hot Trap #2
					4. Surge Tank
					5. Cooling Gas System
					6. EMP
					7. Piping

Proposed IFMIF Work Breakdown Structure (WBS)

1.	*2.*	*3.*	*4.*	*5.*	*6. Level*
					8. Valve
					9. Impurity Monitoring
					10. Control System
					11. Measuring Devices
					12. Radiation Shielding
				3.	0. Secondary Cooling System
				4.	0. Water Cooling System
		3.	0.	0.	0. Lithium Recovery System
			1.	0.	0. Assembly and Testing
				1.	0. Assembly
				2.	0. Testing
			2.	0.	0. Components
				1.	0. Target System Building
				2.	0. Leaked Lithium Recovery System
				3.	0. Leaked Lithium Detection System
				4.	0. Lithium Fire Protection System
		4.	0.	0.	0. Target Facility Control System
			1.	0.	0. Assembly and Testing
				1.	0. Assembly
				2.	0. Testing
			2.	0.	0. Components
				1.	0. Normal Operation Control System
				2.	0. Emergency Control System
		5.	0.	0.	0. Target Facility Ventilation System
			1.	0.	0. Assembly and Testing
				1.	0. Assembly
				2.	0. Testing
			2.	0.	0. Components
				1.	0. Radioactive Gas Evacuation System
					1. Tritium Treatment Facility
					2. Other Radioisotope Treatment Facility
				2.	0. General Ventilation System
		6.	0.	0.	0. Target Facility Power System
			1.	0.	0. Assembly and Testing
				1.	0. Assembly
				2.	0. Testing
			2.	0.	0. Components
				1.	0. Commercial Power
				2.	0. Emergency Power
		7.	0.	0.	0. Other Support Facilities
			1.	0.	0. Assembly and Testing
				1.	0. Assembly
				2.	0. Testing
			2.	0.	0. Components
				1.	0.
	3.	**0.**	**0.**	**0.**	**0. Subsystem Development**
	4.	**0.**	**0.**	**0.**	**0. System Installation and Startup**
		1.	0.	0.	0. Installation
		2.	0.	0.	0. Verification Testing
		3.	0.	0.	0. Startup
	5.	**0.**	**0.**	**0.**	**0. Maintenance Systems**
		1.	0.	0.	0. Maintenance Procedure Development
		2.	0.	0.	0. Special purpose tooling
		3.	0.	0.	0. Remote handling equipment
		4.	0.	0.	0. Mockup Facilities and Testing

Proposed IFMIF Work Breakdown Structure (WBS)

1.	*2.*	*3.*	*4.*	*5.*	*6. Level*
4.	**0.**	**0.**	**0.**	**0.**	**0. Accelerator Facility**
1.	**0.**	**0.**	**0.**	**0.**	**0. Accelerator Facility Management**
	1.	0.	0.	0.	0. Project Management and Administration
		1.	0.	0.	0. Administration
		2.	0.	0.	0. Cost Control
		3.	0.	0.	0. Schedule
		4.	0.	0.	0. Documentation
	2.	0.	0.	0.	0. Systems Engineering
		1.	0.	0.	0. Design Integration
		2.	0.	0.	0. Systems Analysis
		3.	0.	0.	0. Requirements/Specs
		4.	0.	0.	0. RAM Analysis
	3.	0.	0.	0.	0. Environmental, Safety & Health Documentation
	4.	0.	0.	0.	0. Quality Assurance
2.	**0.**	**0.**	**0.**	**0.**	**0. Subsystems**
	1.	0.	0.	0.	0. Ion Injector
		1.	0.	0.	0. Assembly and Testing
			1.	0.	0. Assembly
			2.	0.	0. Testing
		2.	0.	0.	0. Components
			1.	0.	0. RF Antenna
			2.	0.	0. RF Generator
			3.	0.	0. Extractor
			4.	0.	0. Gas Supply
			5.	0.	0. Magnetic Optics
			6.	0.	0. Diagnostics
			7.	0.	0. Structure and Shielding
			8.	0.	0. Vacuum System
			9.	0.	0. Subsystem I & C
					1. Beam Fast Shut-Down
					2. Beam Current, Duty-Factor Control
			10.	0.	0. Subsystem Power
		3.	0.	0.	0. Maintenance Systems
	2.	0.	0.	0.	0. RFQ System
		1.	0.	0.	0. Assembly and Testing
			1.	0.	0. Assembly
			2.	0.	0. Testing
		2.	0.	0.	0. Components
			1.	0.	0. Stage Modules
			2.	0.	0. Strong-back Frame
			3.	0.	0. Vacuum Pumping System
			4.	0.	0. COAX Drive System
			5.	0.	0. Cooling System
			6.	0.	0. Resonance Control System
			7.	0.	0. Subsystem Power
			8.	0.	0. Subsystem I & C
			9.	0.	0. Diagnostics
		3.	0.	0.	0. Maintenance Systems
	3.	0.	0.	0.	0. Drift Tube Linac
		1.	0.	0.	0. Assembly and Testing
			1.	0.	0. Assembly
			2.	0.	0. Testing
		2.	0.	0.	0. Components
			1.	0.	0. Tank Assemblies
			2.	0.	0. Vacuum Pumping System
			3.	0.	0. COAX Drive System

Proposed IFMIF Work Breakdown Structure (WBS)

1.	*2.*	*3.*	*4.*	*5.*	*6.*	*Level*
				4.		0. Cooling System
				5.		0. Resonance Control System
				5.		0. Subsystem Power
				6.		0. Subsystem I & C
				7.		0. Diagnostics
			3.	0.		0. Maintenance Systems
		4.	0.	0.		0. High Energy Beam Transport
			1.	0.		0. Assembly and Testing
				1.		0. Assembly
				2.		0. Testing
			2.	0.		0. Components
				1.		0. Dipole Magnets
				2.		0. Quadrupole Magnets
				3.		0. Multipole Magnets
				4.		0. Vacuum Pumping System
				5.		0. Resonance Control System
				6.		0. Subsystem Power
				7.		0. Subsystem I & C
				8.		0. Diagnostics
			3.	0.		0. Maintenance Systems
			4.	0.		0. Subsystem R&D
		5.	0.	0.		0. RF Power Supplies
			1.	0.		0. Assembly and Testing
				1.		0. Assembly
				2.		0. Testing
			2.	0.		0. Components
				1.		0. Final Stage Power Amplifiers
				2.		0. Driver Power Amplifiers
				3.		0. RF Field Control System
				4.		0. Cooling System
				5.		0. Resonance Control System
				6.		0. RF System AC/DC Power
						1. High-Voltage Power Supplies
						2. Power Conditioning
						3. Fault Protection
						4. Auxiliary Power Supplies
				7.		0. RF System I & C
				8.		0. Diagnostics
			3.	0.		0. Maintenance Systems
		6.	0.	0.		0. Beam Dump
			1.	0.		0. Assembly and Testing
				1.		0. Assembly
				2.		0. Testing
			2.	0.		0. Components
				1.		0. Beam Dump Assembly
				2.		0. Vacuum Pumping System
				3.		0. Cooling System
				4.		0. Subsystem Power
				5.		0. Subsystem I & C
				6.		0. Diagnostics
			3.	0.		0. Maintenance Systems
		7.	0.	0.		0. Accelerator Systems I&C
			1.	0.		0. Assembly and Testing
				1.		0. Assembly
				2.		0. Testing
			2.	0.		0. Components
				1.		0. Central Computers

Proposed IFMIF Work Breakdown Structure (WBS)

1.	*2.*	*3.*	*4.*	*5.*	*6. Level*
				2.	0. Data Transmission Network
				3.	0. Local Control
				4.	0. Database
				5.	0. Logging and Facility Fault Analysis
			3.	0.	0. Maintenance Systems
		8.	0.	0.	0. Support Systems
			1.	0.	0. Assembly and Testing
				1.	0. Assembly
				2.	0. Testing
			2.	0.	0. Components
				1.	0. Vacuum
	3.	**0.**	**0.**	**0.**	**0. Subsystem Development**
		1.	0.	0.	0. RF Power System Development Module
			1.	0.	0. Dummy Load Tests
			2.	0.	0. Resonant Load Tests
			3.	0.	0. Control System Tests
			4.	0.	0. Operations and Maintenance Procedures Development
			5.	0.	0. Fault Recovery Procedures Development
		2.	0.	0.	0. RFQ Development Model
			1.	0.	0. Cold-Model Tests
			2.	0.	0. Power-Model Tests
			3.	0.	0. Control System Tests
			4.	0.	0. Operations and Maintenance Procedures Development
			5.	0.	0. Fault Recovery Procedures Development
		3.	0.	0.	0. Beam Instrumentation Development
			1.	0.	0. Beam Centroid Position Monitor
			2.	0.	0. Beam Centroid Phase Monitor
			3.	0.	0. Beam Profile Monitor
				1.	0. In-Accelerator Profile Monitor
				2.	0. On-Target Profile Monitor
		4.	0.	0.	0. Injector Development Model
			1.	0.	0. Ion Source
				1.	0. Lifetime Tests
			2.	0.	0. Dual Injector Low-Energy-Beam-Transport
				1.	0. Beam Characterization
			3.	0.	0. Source-Switching Development
				1.	0. Robotic Switching Under Vacuum
			4.	0.	0. Current and Duty-Factor Control
		5.	0.	0.	0. Drift-Tube Linac Development Model
			1.	0.	0. Cold-Model Tests
			2.	0.	0. Power-Model Tests
			3.	0.	0. Control System Tests
			4.	0.	0. Operations and Maintenance Procedures Development
			5.	0.	0. Fault Recovery Procedures Development
	4.	**0.**	**0.**	**0.**	**0. System Installation and Startup**
		1.	0.	0.	0. Installation
		2.	0.	0.	0. Verification Testing
		3.	0.	0.	0. Startup
	5.	**0.**	**0.**	**0.**	**0. Maintenance Systems**
		1.	0.	0.	0. Maintenance Procedure Development
		2.	0.	0.	0. Special purpose tooling
		3.	0.	0.	0. Remote handling equipment
		4.	0.	0.	0. Mockup Facilities and Testing

Proposed IFMIF Work Breakdown Structure (WBS)

1.	*2.*	*3.*	*4.*	*5.*	*6. Level*
5.	**0.**	**0.**	**0.**	**0.**	**0. Conventional Facilities**
	1.	**0.**	**0.**	**0.**	**0. Conventional Facility Management**
		1.	0.	0.	0. Project Management and Administration
			1.	0.	0. Administration
			2.	0.	0. Cost Control
			3.	0.	0. Schedule
			4.	0.	0. Documentation
		2.	0.	0.	0. Systems Engineering
			1.	0.	0. Design Integration
			2.	0.	0. Requirements/Specs
			3.	0.	0. RAM Analysis
		3.	0.	0.	0. Environmental, Safety & Health Documentation
		4.	0.	0.	0. Quality Assurance
	2.	**0.**	**0.**	**0.**	**0. Buildings and Site Improvements**
		1.	0.	0.	0. Accelerator Complex
			1.	0.	0. Accelerator Halls
				1.	0. Accelerator Hall # 1
					1. Conventional Construction
					2. Ventilation
					3. Accelerator Pedestals
					4. Lighting
				2.	0. Accelerator Hall # 2
					1. Conventional Construction
					2. Ventilation
					3. Accelerator Pedestals
					4. Lighting
			2.	0.	0. Beam Turning Room
				1.	0. Conventional Construction
				2.	0. Ventilation
				3.	0. HEBT Pedestals
				4.	0. Lighting
			3.	0.	0. RF Power Bay
				1.	0. Power Bay # 1
					1. Conventional Construction
					2. Ventilation
					3. HEBT Pedestals
					4. Lighting
				2.	0. Power Bay # 2
					1. Conventional Construction
					2. Ventilation
					4. Lighting
			4.	0.	0. Accelerator Assembly/Maintenance Bays
				1.	0. Maintenance Bay # 1
					1. Conventional Construction
					2. Shielding Door
					3. Ventilation
					4. Lighting
				2.	0. Maintenance Bay # 2
					1. Conventional Construction
					2. Shielding Door
					3. Ventilation
					4. Lighting
		2.	0.	0.	0. Target Complex
			1.	0.	0. Lithium Processing Cells
				1.	0. Conventional Construction
				2.	0. Cell Liner

Proposed IFMIF Work Breakdown Structure (WBS)

1.	*2.*	*3.*	*4.*	*5.*	*6.*	*Level*
				3.	0.	0. Cell Portals
			2.	0.	0.	0. Equipment Access Port
			3.	0.	0.	0. Cooling Tower Facility
		3.	0.	0.	0.	0. Test and Examination Complex
			1.	0.	0.	0. Test Cells
				1.	0.	0. Test Cell #1
					1.	1. Conventional Construction
					2.	2. Cell Liner
					3.	3. Cell Portals
				2.	0.	0. Test Cell #2
					1.	1. Conventional Construction
					2.	2. Cell Liner
					3.	3. Cell Portals
			2.	0.	0.	0. Beam Calibration Station Cell
				1.	0.	0. Conventional Construction
				2.	0.	0. Cell Liner
				3.	0.	0. Cell Portals
			3.	0.	0.	0. Access Cell
				1.	0.	0. Conventional Construction
				2.	0.	0. Cell Liner
				3.	0.	0. Cell Portals
				4.	0.	0. Ventilation
			4.	0.	0.	0. VTA & Target Service Cell
				1.	0.	0. Conventional Construction
				2.	0.	0. Cell Liner
				3.	0.	0. Cell Portals
				4.	0.	0. Ventilation
			5.	0.	0.	0. Hot Cell Ventilation Utilities Cell
				1.	0.	0. Conventional Construction
				2.	0.	0. Cell Liner
				3.	0.	0. Cell Portals
				4.	0.	0. Ventilation
			6.	0.	0.	0. Module Handling Cell
				1.	0.	0. Conventional Construction
				2.	0.	0. Cell Liner
				3.	0.	0. Cell Portals
				4.	0.	0. Ventilation
			7.	0.	0.	0. Specimen Ecapsulation Cell
				1.	0.	0. Conventional Construction
				2.	0.	0. Cell Liner
				3.	0.	0. Cell Portals
				4.	0.	0. Ventilation
			8.	0.	0.	0. PIE Cells
				1.	0.	0. Structure and Shielding
				2.	0.	0. Cell liners
					1.	1. Specimen Welding and Encapsulation Hot Cell
					2.	2. Tensile Test Hot Cell
					3.	3. Creep-Fatigue Hot Cells (isothermal&thermomechanical)
					4.	4. Bend Bar/Fracture Toughness/Charpy Testing Hot Cell
					5.	5. Corrosion/Fatigue Testing Hot Cells (total of 2)
					6.	6. Fatigue Crack Growth Testing Hot Cell
					7.	7. Laser Profilometry (pressurized creep tube) Hot Cell
					8.	8. Optical Microscopy Hot Cell
					9.	9. Scanning Electron Microscopy Hot Cell
		4.	0.	0.	0.	0. Maintenance and Shop Complex
			1.	0.	0.	0. "Hot" shop
				1.	0.	0. Conventional Construction

Proposed IFMIF Work Breakdown Structure (WBS)

1.	*2.*	*3.*	*4.*	*5.*	*6.*	*Level*
				2.	0.	0. Containment Structures
				3.	0.	0. Maintenance & Testing Equipment
			2.	0.	0.	0. Uncontaminated shop
				1.	0.	0. Conventional Construction
				2.	0.	0. Maintenance & Testing Equipment
			3.	0.	0.	0. Manipulator repair
				1.	0.	0. Conventional Construction
				2.	0.	0. Containment Structures
				3.	0.	0. Maintenance & Testing Equipment
			4.	0.	0.	0. Rad Waste Processing
				1.	0.	0. Conventional Construction
				2.	0.	0. Containment Structures
				3.	0.	0. Processing Equipment
			5.	0.	0.	0. Rad Waste Shipping
				1.	0.	0. Conventional Construction
				2.	0.	0. Containment Structures
				3.	0.	0. Waste Handling Equipment
				4.	0.	0. Truck Access Bay
			6.	0.	0.	0. HP Laboratory
				1.	0.	0. Conventional Construction
				2.	0.	0. Containment Structures
				3.	0.	0. Laboratory/Office Equipment
		5.	0.	0.	0.	0. Support Facilities
			1.	0.	0.	0. Plant Service Halls
			2.	0.	0.	0. Office Complex
				1.	0.	0. Offices/Conference Rooms
				2.	0.	0. Central Control
				3.	0.	0. Health Physics Lab
		6.	0.	0.	0.	0. Plant Gaseous Effuent System
			1.	0.	0.	0. Ducting
			2.	0.	0.	0. Filter Housings
			3.	0.	0.	0. Controls
			4.	0.	0.	0. Vent Stack
			5.	0.	0.	0. Structures and Supports
	3.	**0.**	**0.**	**0.**	**0.**	**0. Site Improvements**
			1.	0.	0.	0. Roads and Parking
			2.	0.	0.	0. Grading and Landscaping
			3.	0.	0.	0. Storm Drainage
	4.	**0.**	**0.**	**0.**	**0.**	**0. Plant Services**
		1.	0.	0.	0.	0. Water Systems
			1.	0.	0.	0. Piping
			2.	0.	0.	0. Storage
			3.	0.	0.	0. Sewers
		2.	0.	0.	0.	0. Power Systems
			1.	0.	0.	0. Substation
			2.	0.	0.	0. Distribution
		3.	0.	0.	0.	0. Natural Gas
		4.	0.	0.	0.	0. Argon
	5.	**0.**	**0.**	**0.**	**0.**	**0. Temporary Facilities**
		1.	0.	0.	0.	0. Site Storage
		2.	0.	0.	0.	0. Buildings
		3.	0.	0.	0.	0. Access

Proposed IFMIF Work Breakdown Structure (WBS)

1.	*2.*	*3.*	*4.*	*5.*	*6. Level*
6.	**0.**	**0.**	**0.**	**0.**	**0. Central Control Systems**
	1.	**0.**	**0.**	**0.**	**0. System Management**
		1.	0.	0.	0. System Administration
		2.	0.	0.	0. Administrative Support
			1.	0.	0. Secretarial
			2.	0.	0. Planning, Schedule, Cost Control
		3.	0.	0.	0. Procurement Support
		4.	0.	0.	0. Documentation
		5.	0.	0.	0. Computer Systems Engrg
			1.	0.	0. Systems Integration
			2.	0.	0. Requirements/Specifications/Standards
			3.	0.	0. Subsystem Development
		6.	0.	0.	0. Quality Assurance
			1.	0.	0. Requirements, Acceptance Criteria/Test
			2.	0.	0. Training, Qualification
		7.	0.	0.	0. Safety/Reliability
	2.	**0.**	**0.**	**0.**	**0. Computer Subsystems**
		1.	0.	0.	0. Central Computer
			1.	0.	0. Hardware
				1.	0. Computers, Monitors
				2.	0. Status Display Panels
				3.	0. Data Storage Hardware
				4.	0. Uninteruptable Power Supply
				5.	0. LAN Controller, Node Hardware, Cabling
				6.	0. Computer Racks, Furniture
			2.	0.	0. Software
				1.	0. Operation and Configuration Control (EPICS)
				2.	0. prog lang, math analysis, drivers
			3.	0.	0. Operator Interface H/W
				1.	0. monitors, drives, printer
				2.	0. Diagnosic/Sensor I/O control boards
		2.	0.	0.	0. Substation Interface, Interlock Equipment
			1.	0.	0. Injector
			2.	0.	0. RF Power
			3.	0.	0. RFQ
			4.	0.	0. DTL
			5.	0.	0. HEBT
			6.	0.	0. Test Cell
			7.	0.	0. Target
			8.	0.	0. Beam Calibrator
			9.	0.	0. Facility Services
			10.	0.	0. Safety Interlocks
	3.	**0.**	**0.**	**0.**	**0. System Installation & Startup**
		1.	0.	0.	0. Installation and Test
			1.	0.	0. Computers
			2.	0.	0. LAN
			3.	0.	0. Sensor Interface Modules
			4.	0.	0. Data operations
		2.	0.	0.	0. Commissioning
			1.	0.	0. Subsystem testing
			2.	0.	0. Facility Services/Interlock Testing
			3.	0.	0. Integrated system testing
			4.	0.	0. Operational Startup
	4.	**0.**	**0.**	**0.**	**0. Maintenance**
		1.	0.	0.	0. Operational Maintenance
		2.	0.	0.	0. System Upgrades

Internal Distribution

			Copies
1-5	Haines	J.R.	5
6-11	Rennich	M.	6
12	Zinkle	S.J.	1
13-15	Record Copies		3

External Distribution

16	Berk	S.E.	1
17	Berwald	D.	1
18	Bloom	E.E.	1
19	Cevolani	S.	1
20-21	Cozzani	F.	2
22	Daum	E.	1
23	Delayen	J.	1
24-29	Ehrlich	K.	6
30	Gelles	D.S.	1
31	Gomes	I.C.	1
32	Green	L.	1
33	Hishinuma	A.	1
34	Hoshi	Y.	1
35	Hua	T.	1
36-41	Jameson	R.A.	6
42	Jitsukawa	S.	1
43	Kato	Y.	1
44-49	Katsuta	H.	6
50	Klein	H.	1
51	Kondo	T.	1
52	Konoshi	S.	1
53	Lagniel	J M	1
54	Maekawa	H.	1
55	Martone	M.	1
56	McKnight	R.H.	1
57	Mendelsohn	S.	1
58-63	Moeslang	A.	6
64	Monti	S.	1
65-66	Noda	K.	2
67	Okuda	M	1
68	Olivier	M.	1
69	Phillips	G.J.	1
70	Piaszczyk	C.	1
71	Piechowiak	E.	1
72	Rathke	J.	1
73	Roberts	M.	1
74-79	Shannon	T.E.	6
80	Smith	D.	1
81	Sugimoto	M.	1
82	Takahashi	M.	1
83	Tavassoli	F	1
84	Teplyakov	V.A.	1
85	Thomson	S.L.	1
86	Verrall	R.A.	1
87	Victoria	M.	1
88	Viola-Teres	J.R.	1
89-90	Wiffen	F.W.	2
91	Wilson	M.	1
92-93	Zavialsky	L.P.	2
94-95	OSTI		2